ZM-3291 thru ZM-3299
ZM-3306 thru ZM-3311
ZM-3365 thru ZM-3376
ZM-3404 thru ZM-3427
ZM-3436 thru ZM-3438

Traveling-Wave Tubes

Technical Information

RF PERFORMANCE

TUBE TYPE			Frequency Range (Gc)	Max. Noise Figure (db)	Min. Small Signal Gain (db)	Min. Sat. Power Output (mw)	Data Group
28 vdc Power Supply	115 v 400 cps Power Supply	115 v 60-400 cps Power Supply					
ZM-3365	ZM-3366	ZM-3367	2.0-4.0	8	30	5	1
ZM-3368	ZM-3369	ZM-3370	2.2-2.3	5.5	30	5	1
ZM-3371	ZM-3372	ZM-3373	2.7-3.3	6.0	30	7	1
ZM-3291	ZM-3292	ZM-3293	4.0-8.0	8	25	5	1
ZM-3416	ZM-3417	ZM-3418	4.3-7.35	7	30	10	1
ZM-3419	ZM-3420	ZM-3421	4.4-5.0	6	30	10	1
ZM-3422	ZM-3423	ZM-3424	5.4-5.9	6	30	10	1
ZM-3425	ZM-3426	ZM-3427	5.9-6.5	6	30	10	1
ZM-3404	ZM-3405	ZM-3406	7.0-8.5	7	30	10	1
ZM-3294	ZM-3295	ZM-3296	7.0-11.0	8	25	5	1
ZM-3306	ZM-3307	ZM-3308	7.0-11.0	9	25	5	1
ZM-3407	ZM-3408	ZM-3409	7.5-8.5	6.5	30	10	1
ZM-3309	ZM-3310	ZM-3311	8.0-12.0	8	25	5	1
ZM-3297	ZM-3298	ZM-3299	8.0-12.0	9	25	5	1
ZM-3410	ZM-3411	ZM-3412	8.5-9.6	7	30	10	1
ZM-3413	ZM-3414	ZM-3415	9.0-10.0	7	30	10	1
ZM-3374	ZM-3375	ZM-3376	9.75-15.0	11	30	5	3
ZM-3436	ZM-3437	ZM-3438	12.0-16.0	10	30	5	2

- LOW NOISE
- S, C, X, & Ku BANDS
- SRPM FOCUSING
- INTEGRAL POWER SUPPLY

FEATURES

low noise

broad bandwidth

single-reversal permanent-magnet focusing ‡

metal-ceramic construction

military environment

light weight

crystal mixer protection

integral power supply
- solid state
- line surge protection
- long term stability

APPLICATIONS

radar

ecm

instrumentation

communications

radiometry

MECHANICAL AND MISCELLANEOUS

DATA GROUP	1	2 & 3
VSWR, max		
Input	2.5	2.5
Output	2.5	2.5
Mounting position	Any	Any
Weight, lb.	15.5	16.0
Overall length, in	13.85	12.11
Cooling	Convection	Convection
Connectors		
RF input	Type N, female	See outline
RF output	Type N, female	See outline
Power	Deutsch DM9601-3P (or equiv.)	Deutsch DM9601-3P (or equiv.)

TYPICAL CHARACTERISTICS

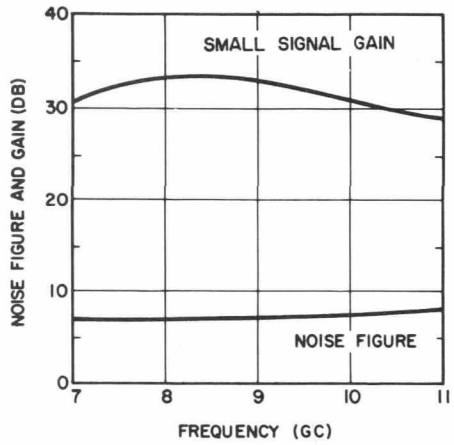

GENERAL ELECTRIC

POWER SUPPLY REQUIREMENTS

Nominal Rating	115 v 60-400 cps	115 v 400 cps	28 vdc
Voltage range	100-135 vac	100-135 vac	24-29 vdc
Voltage transients	*	*	**
Freq. range	48-420 cps	380-420 cps	—
Power, max.	30 w	30 w	30 w

* Transients per MIL-STD-704 par. 5. 1. 4. 2. If voltage exceeds 175 volts for 3 sec, the fuse will blow.

** Transients per MIL-STD-704 par. 5. 2. 3. 2.

ENVIRONMENTAL

Shock (energized)	30 G, 11 ms, 3 axes
Vibration (operating)	15 G, 90 to 2000 cps
Temp. Ambient (operating)	-54 to +71 C#
Altitude (operating)	100,000 ft
Acoustic Noise (operating)	150 db, 25 to 12,000 cps

OUTLINE (Data Group 1)

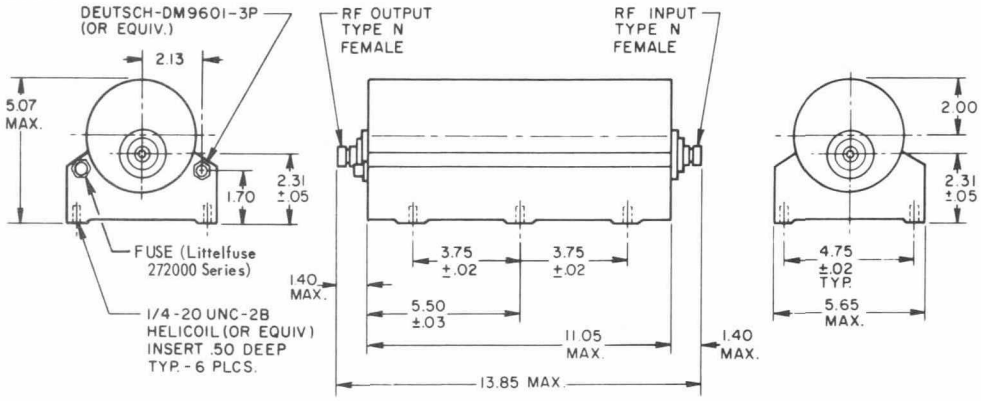

DIMENSIONS ARE IN INCHES; THOSE WITHOUT TOLERANCES ARE APPROXIMATE.

PIN CONNECTIONS

	115V, 60-400 CPS POWER SUPPLY	115V, 400 CPS POWER SUPPLY	28 VDC POWER SUPPLY
PIN	115V LINE	115V LINE	28 VDC LINE
PIN 2	CHASSIS GND.	CHASSIS GND.	GND. (CHASSIS & CIRCUIT)
PIN 3	115V LINE	115V LINE	GND. (CHASSIS & CIRCUIT)

OUTLINE (Data Groups 2 and 3)

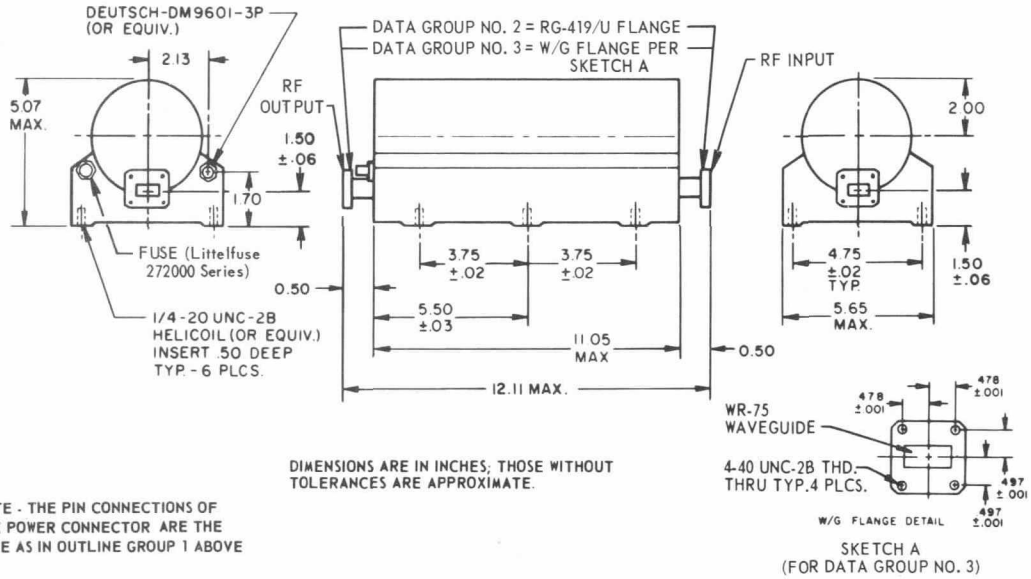

DIMENSIONS ARE IN INCHES; THOSE WITHOUT TOLERANCES ARE APPROXIMATE.

NOTE - THE PIN CONNECTIONS OF THE POWER CONNECTOR ARE THE SAME AS IN OUTLINE GROUP 1 ABOVE

SKETCH A
(FOR DATA GROUP NO. 3)

NOTES

‡ Since these tubes are single-reversal permanent-magnet focused and magnetically shielded, they are well suited for applications requiring close physical spacing with other tubes or magnetic materials.

\# This tube is capable of operating to +85°C with approximately 0. 5 db degradation in noise figure.

These data are subject to change without notice.

TUBE DEPARTMENT

GENERAL ELECTRIC

Owensboro, Kentucky