Traveling-Wave Tubes

Technical Information

- LOW NOISE
- P & L BANDS
- PPM FOCUSING
- INTEGRAL POWER SUPPLY

RF PERFORMANCE

TUBE TYPE			Frequency Range (Gc)	Maximum Noise Figure (db)	Minimum Small Signal Gain (db)	Minimum Saturation Power Output (db)
28 vdc Power Supply	115 v 400 cps Power Supply	115 v 60 cps Power Supply				
ZM-3353	ZM-3354	ZM-3355	775-1.45	11	28	10
ZM-3356	ZM-3357	ZM-3358	1.0-2.0	10	30	10
ZM-3359	ZM-3360	ZM-3361	1.2-1.4	8	35	10
ZM-3362	ZM-3363	ZM-3364	1.7-2.4	9	35	10

FEATURES

- low noise
- broad bandwidth
- periodic permanent-magnet focusing
- military environment
- lightweight
- crystal mixer protection
- integral power supply
  - solid state
  - line surge protection
  - long term stability

APPLICATIONS

- radar
- ecm
- instrumentation
- communications
- radiometry

MECHANICAL AND MISCELLANEOUS

VSWR, max	
Input	2.0
Output	2.0
Mounting position	Any
Weight, lb.	9.0
Overall length, in	16.0
Cooling	Convection
Connectors	
RF input	TNC
RF output	TNC
Power	Deutsch DM9601-3P (or equiv.)

TYPICAL CHARACTERISTICS

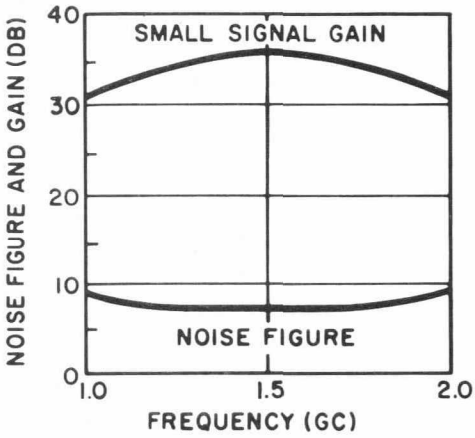

GENERAL ELECTRIC

POWER SUPPLY REQUIREMENTS

Nominal Rating	115 v 60 cps	115 v 400 cps	28 vdc
Voltage range	100-135 vac	100-135 vac	24-29 vdc
Voltage transients	*	*	**
Freq. range	48-75 cps	380-420 cps	—
Power, max.	30 w	30 w	30 w

* Transients per MIL-STD-704 par. 5.1.4.2. If voltage exceeds 175 volts for 3 sec, the fuse will blow.

** Transients per MIL-STD-704 par. 5.2.3.2

ENVIRONMENTAL

Shock (energized)	30 G, 11 ms, 3 axes
Vibration (operating)	15 G, 90 to 2000 cps
Temp. Ambient (operating)	-54 to +71 C
Altitude (operating)	100,000 ft.
Acoustic Noise (operating)	150 db, 25 to 12,000 cps

OUTLINE

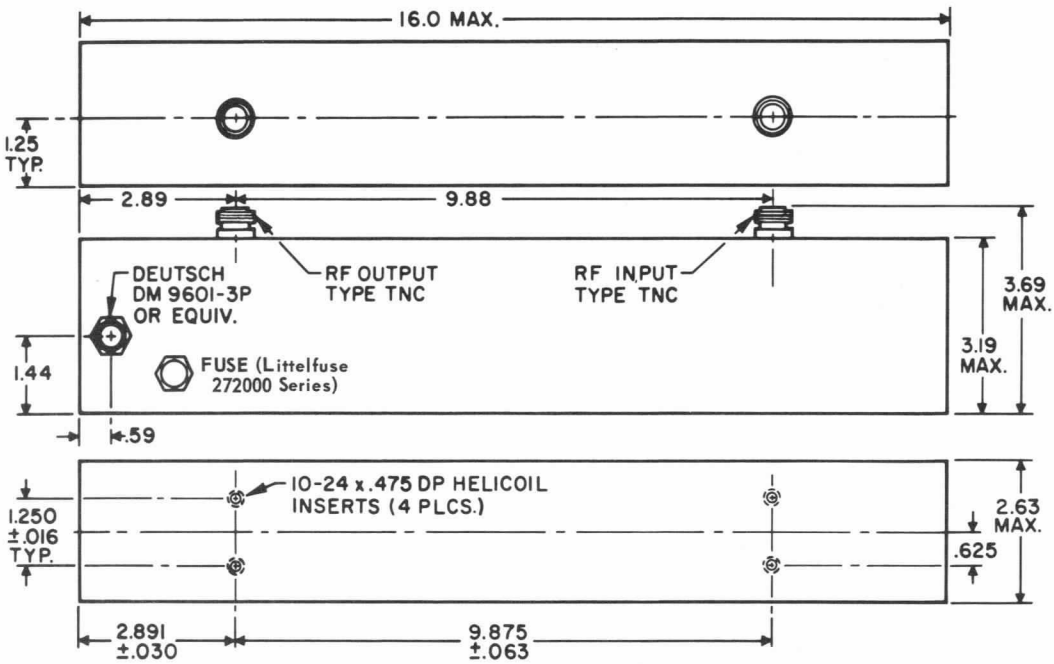

DIMENSIONS ARE IN INCHES; THOSE WITHOUT TOLERANCES ARE APPROXIMATE

PIN CONNECTIONS

	115V, 60 CPS POWER SUPPLY	115V, 400 CPS POWER SUPPLY	28 VDC POWER SUPPLY
PIN 1	115V LINE	115V LINE	28 VDC LINE
PIN 2	CHASSIS GND.	CHASSIS GND.	GND. (CHASSIS & CIRCUIT)
PIN 3	115V LINE	115V LINE	GND. (CHASSIS & CIRCUIT)

These data are subject to change without notice.

TUBE DEPARTMENT

GENERAL ELECTRIC

Owensboro, Kentucky