ZM-3265
ZM-3266
ZM-3267
ZM-3268
ZM-3270
ZM-3271
ZM-3272

# Traveling-Wave Tubes

## Technical Information

- LOW NOISE
- X-BAND
- PPM FOCUSING

### RF PERFORMANCE

| Tube Type | Frequency Range (Gc) | Maximum Noise Figure (db) | Minimum Small Signal Gain (db) | Minimum Saturation Power Output (mw) |
|---|---|---|---|---|
| ZM-3270 | 7.0 - 8.5 | 8.0 | 35 | 10 |
| ZM-3266 | 7.0 - 11.0 | 8.0 | 30 | 10 |
| ZM-3265 | 7.0 - 12.0 | 9.0 | 30 | 3 |
| ZM-3271 | 7.5 - 8.5 | 7.5 | 35 | 10 |
| ZM-3267 | 8.0 - 12.0 | 8.5 | 30 | 5 |
| ZM-3268 | 8.5 - 9.6 | 7.5 | 35 | 10 |
| ZM-3272 | 9.0 - 10.0 | 8.0 | 33 | 10 |

### FEATURES

- low noise
- broad bandwidth
- periodic permanent magnet focusing
- metal-ceramic construction
- military environments
- light weight
- crystal mixer protection

### APPLICATIONS

- radar
- ecm
- instrumentation
- communications
- radiometry

### MECHANICAL & MISCELLANEOUS

| | |
|---|---|
| VSWR, max | |
| Input | 2.5 |
| Output | 2.5 |
| Mounting position | Any |
| Weight, lb | 5.5 |
| Over-all length, in | 11.0 |
| Cooling | Convection |
| Connectors | |
| RF input | Type N |
| RF output | Type N |
| DC | Winch'r M12P or equiv. |
| Collector | Winch'r PM1PLS or equiv. |

### TYPICAL CHARACTERISTICS

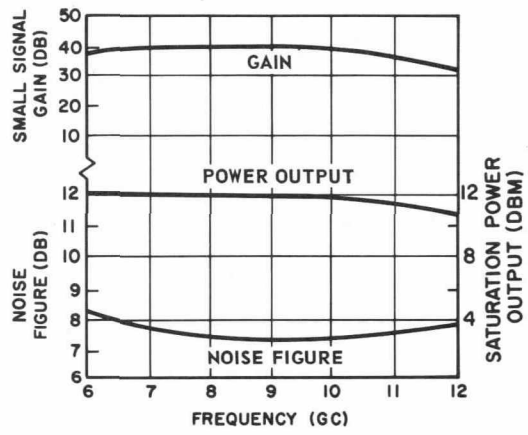


GENERAL ELECTRIC

## OPERATING CONDITIONS*

| | |
|---|---|
| Htr. vac or vdc | 6.3 |
| Htr. amp (max) | 0.35 |
| Elect. 1, vdc | 0 to -25 |
| Elect. 2, vdc | 0 to 75 |
| Elect. 3, vdc | 0 to 200 |
| Elect. 4, vdc | 50 to 400 |
| Helix, vdc | 700 to 900 |
| Helix, μa (max.) | 150 |
| Collector, vdc | 900 to 1100 |
| Beam, μa (max.) | 1000 |

## ENVIRONMENTAL

| | |
|---|---|
| Shock (energized) | 30 G, 11 ms<br>3 axes |
| Vibration (operating) | 15 G, 70 to<br>2,000 cps |
| Temp. Ambient† (operating) | -65 C to<br>+100 C |
| Altitude (operating) | 100,000 ft. |
| Acoustic Noise (operating) | 135 db, 25 to<br>12,000 cps |

## OUTLINE

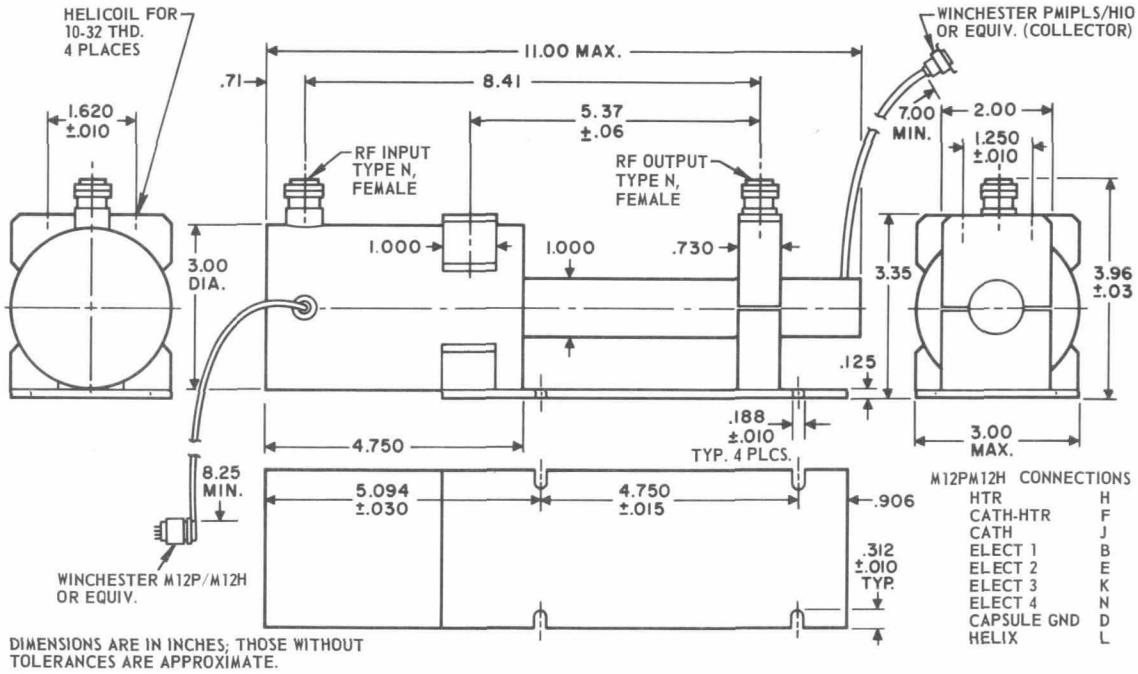


## NOTES

* Voltages shown are measured with respect to cathode. All voltages may be isolated from ground. For minimum noise and optimum gain characteristics, voltages should be adjusted to values specified by instructions accompanying each tube. These values will be within the ranges given above.

† Some degradation of performance may occur under extremes of indicated environmental conditions.

These data are subject to change without notice.


**TUBE DEPARTMENT**

**GENERAL ELECTRIC**

**Owensboro, Kentucky**