ZM-3200
ZM-3201
ZM-3202
ZM-3214
ZM-3215
ZM-3258
ZM-3259

Traveling-Wave Tubes

Technical Information

- LOW NOISE
- X-BAND
- PPM FOCUSING

RF PERFORMANCE

Tube Type	Frequency Range (Gc)	Maximum Noise Figure (db)	Minimum SS Gain (db)	Minimum Saturation Power Output (mw)
ZM-3258	7.0 - 11.0	10	30	10
ZM-3214	7.0 - 11.0	12	30	10
ZM-3200	7.0 - 11.0	14	35	20
ZM-3202	7.0 - 12.0	16	30	10
ZM-3259	8.0 - 12.0	10	30	10
ZM-3215	8.0 - 12.0	12	30	10
ZM-3201	8.0 - 12.0	15	35	20

FEATURES

- lowest noise
- broadband
- periodic permanent magnet focused
- metal ceramic construction
- military environments
- lightweight
- crystal mixer protection

APPLICATIONS

- radar
- ecm
- instrumentation
- communications
- radiometry

MECHANICAL & MISCELLANEOUS

VSWR, max.	
Input	2.5
Output	2.5
Mounting Position	Any
Weight, lb.	4.5
Overall Length, in.	12.81
Cooling	Convection
RF Connectors	Type N
DC Connector	Winchester M12P or equiv.
Collector Connector	Winchester PM1P-LS or equiv.

TYPICAL CHARACTERISTICS

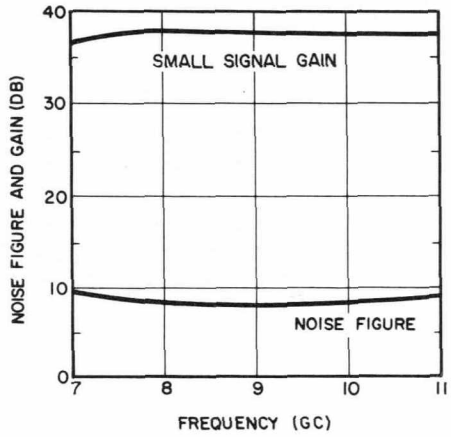

GENERAL ELECTRIC

OPERATING CONDITIONS†

Htr, vac or vdc	6.3
Htr, amp (max.)	0.26
Grid 1, vdc	-50 to 0
Grid 2, vdc	0 to 100
Grid 3, vdc	10 to 200
Grid 4, vdc	200 to 550
Helix, vdc	1125 to 1250
Helix, μa (max.)	500
Collector, vdc	1225 to 1400
Beam, μa (max.)	1000

ENVIRONMENTAL

Shock (energized)	30 G, 11 ms, 3 axes
Vibration (operating)	15 G, 55 to 2,000 cps
Temp, Ambient# (operating)	-65 C to +100 C
Altitude (operating)	100,000 ft.
Acoustic Noise (operating)	135 db, 25 to 12,000 cps

OUTLINE

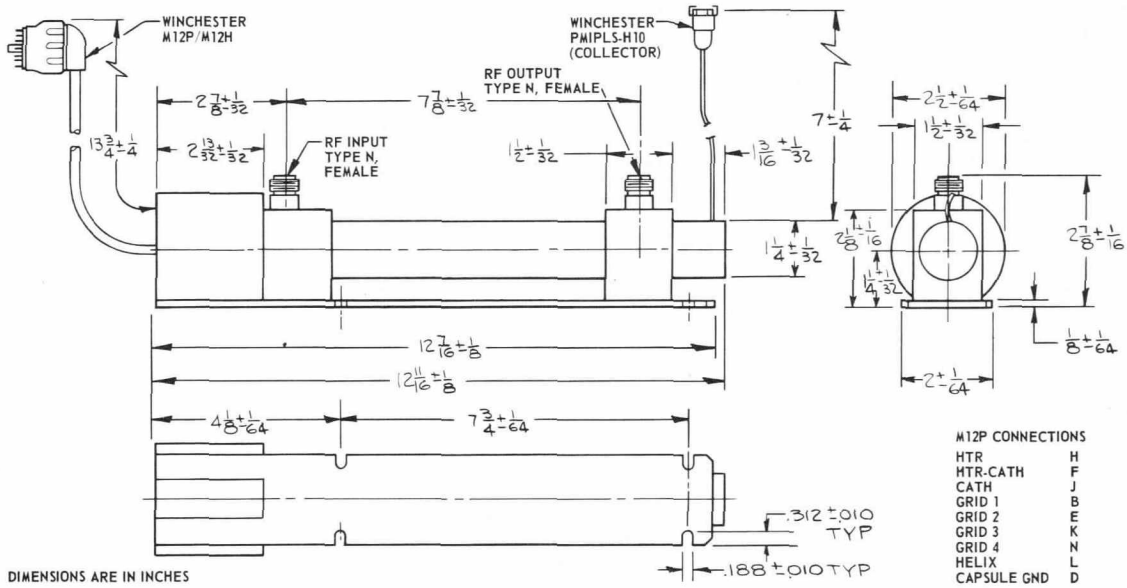

NOTES

† Voltages shown are measured with respect to cathode. All voltages may be isolated from ground. For minimum noise and optimum gain characteristics, voltages should be adjusted to values specified by instructions accompanying each tube. These values will be within the ranges given above.

\# Some degradation of performance may occur under extremes of indicated environmental conditions.

Increased gain and power ratings are available when these tubes are optimized for a narrow frequency band. If such requirements exist, consult the nearest regional sales office of the Tube Department.

These data are subject to change without notice.

TUBE DEPARTMENT

GENERAL ELECTRIC

Owensboro, Kentucky

ZM-3202 ZM-3443
ZM-3258 ZM-3444
ZM-3259

Traveling-Wave Tubes

Technical Information

- LOW NOISE
- X-BAND
- PPM FOCUSING

RF PERFORMANCE

Tube Type	Frequency Range (Gc)	Maximum Noise Figure (db)	Minimum SS Gain (db)	Minimum Saturation Power Output (mw)
ZM-3443	7.0 - 8.5	9.0	37	20
ZM-3258	7.0 - 11.0	10.0	37	20
ZM-3202	7.0 - 12.0	11.0	33	10
ZM-3259	8.0 - 12.0	10.0	33	10
ZM-3444	8.5 - 9.6	9.0	37	20

FEATURES

lowest noise
broadband
periodic permanent magnet focused
metal ceramic construction
military environments
lightweight
crystal mixer protection

APPLICATIONS

radar
ecm
instrumentation
communications
radiometry

MECHANICAL & MISCELLANEOUS

VSWR, max.	
Input	2.5
Output	2.5
Mounting Position	Any
Weight, lb.	4.25
Overall Length, in.	12.81
Cooling	Convection
RF Connectors	Type N
DC Connector	Winchester M12P or equiv.
Collector Connector	Winchester PM1P-LS or equiv.

TYPICAL CHARACTERISTICS

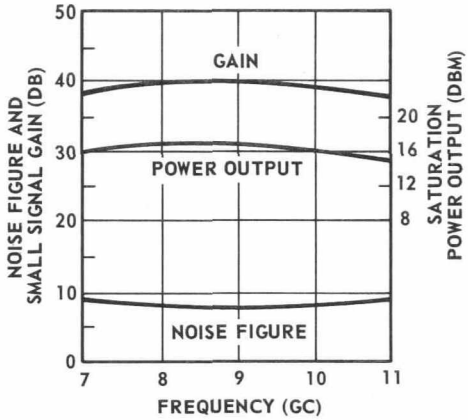

GENERAL ELECTRIC

OPERATING CONDITIONS†

Htr, vac or vdc	6.3
Htr, amp (max.)	0.26
Grid 1, vdc	-50 to 0
Grid 2, vdc	0 to 100
Grid 3, vdc	10 to 200
Grid 4, vdc	200 to 550
Helix, vdc	1125 to 1250
Helix, μa (max.)	500
Collector, vdc	1225 to 1400
Beam, μa (max.)	1000

ENVIRONMENTAL

Shock (energized)	30 G, 11 ms, 3 axes
Vibration (operating)	15 G, 55 to 2,000 cps
Temp, Ambient# (operating)	-65 C to +100 C
Altitude (operating)	100,000 ft.
Acoustic Noise (operating)	135 db, 25 to 12,000 cps

OUTLINE

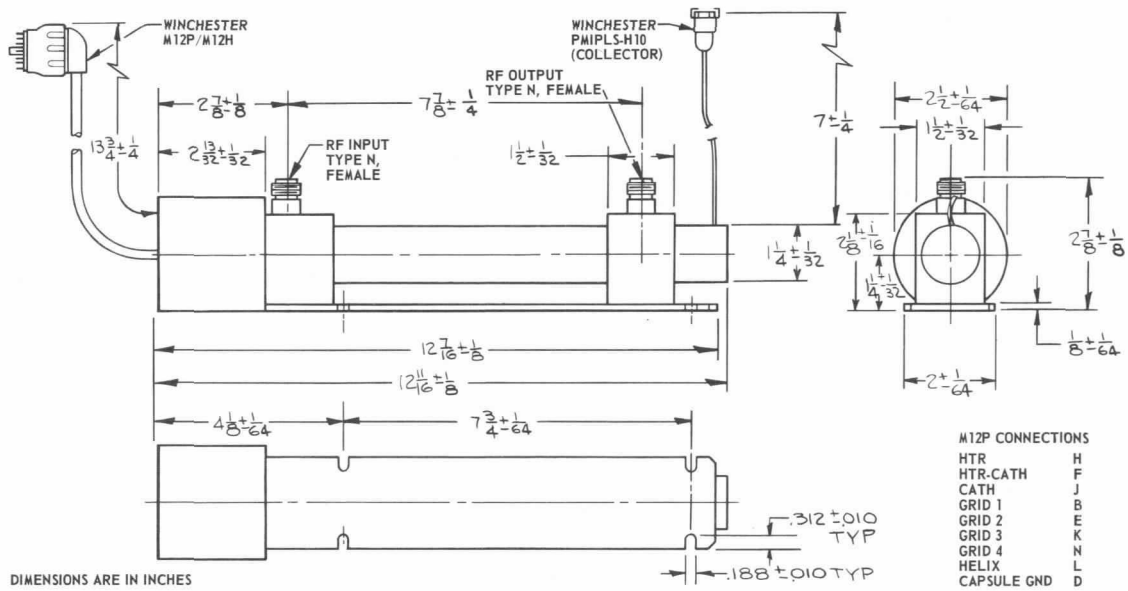

NOTES

† Voltages shown are measured with respect to cathode. All voltages may be isolated from ground. For minimum noise and optimum gain characteristics, voltages should be adjusted to values specified by instructions accompanying each tube. These values will be within the ranges given above.

\# Some degradation of performance may occur under extremes of indicated environmental conditions.

Increased gain and power ratings are available when these tubes are optimized for a narrow frequency band. If such requirements exist, consult the nearest regional sales office of the Tube Department.

These data are subject to change without notice.

TUBE DEPARTMENT

GENERAL ELECTRIC

Owensboro, Kentucky