# INDICATOR TUBE

Cold cathode sign indicator tube for side viewing.

| QUICK REFERENCE DATA | | |
|---|---|---|
| Sign height | 20 | mm |
| Signs | + - | |
| Supply voltage | 170 | V |
| Cathode current | 4.5 | mA |

**DIMENSIONS AND CONNECTIONS** Dimensions in mm

Base: B13B

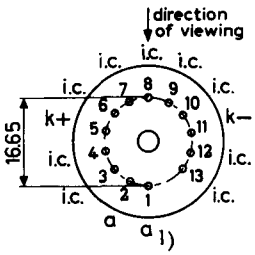


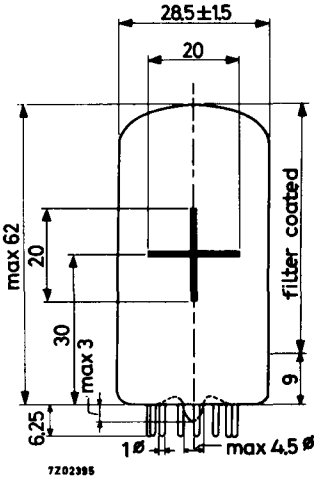


**GENERAL**

The tube has the same physical dimensions as the ZM1040 numeral indicator tube. The ZM1041 is provided with a red contrast filter.

1) Pins 1 and 2 to be interconnected externally.

## CHARACTERISTICS

| | | | | |
|---|---|---|---|---|
| Ignition voltage | $V_{ign}$ | max. | 170 | V |
| Maintaining voltage | $V_m$ | see sheets 3 and 4 | | |
| Extinguishing voltage | $V_{ext}$ | min. | 120 | V |
| "Off" cathode probe current characteristic | | see sheet 4 | | |

## PRINCIPLE OF OPERATION

The tube contains two cathodes, in the form of the signs + and -, and a common anode. By applying a suitable voltage between the anode and one of the cathodes the corresponding sign will be covered by a red neon glow.

## ACCESSORIES

Socket 2422 505 00001, 2422 505 00002 or 2422 505 00003

## MOUNTING POSITION

Any

The signs are viewed through the side of the envelope.

## LIMITING VALUES (Absolute max. rating system)

| | | | | |
|---|---|---|---|---|
| Anode voltage necessary for ignition | $V_a$ | min. | 170 | V |
| Cathode current, | | | | |
| average during any conduction period | $I_k$ | min. | 3 | mA |
| average ($T_{av}$ = 20 ms) | $I_k$ | max. | 6 | mA |
| peak | $I_{kp}$ | max. | 20 | mA |
| Impulse duration | $T_{imp}$ | min. | 80 | μs |
| Cathode selecting voltage | $V_{kk}$ | min. | 60 | V |
| Bias voltage between anode and "off" cathode | $V_{bias}$ | max. | 120 | V |
| Bulb temperature | $t_{bulb}$ | max. | +70 | °C [1] |
| | | min. | -50 | °C |

[1]) Bulb temperatures below 10 °C result in a reduced life expectancy and changes in characteristics (see sheet 4).
In designing equipment to be used within a wide temperature range the use of "constant current operation" (high supply voltage with a high anode series resistor) is recommended.

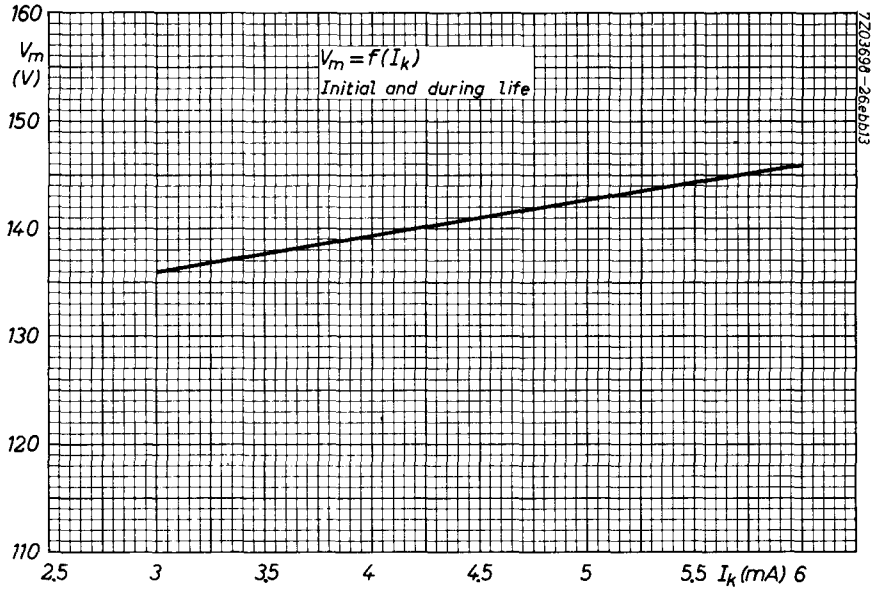
160
$V_m$
(V)
150
140
130
120
110
2.5
3
3.5
4
4.5
5
5.5
$I_k$ (mA)
6
$V_m = f(I_k)$
Initial and during life
7Z03696-26.6.6.13

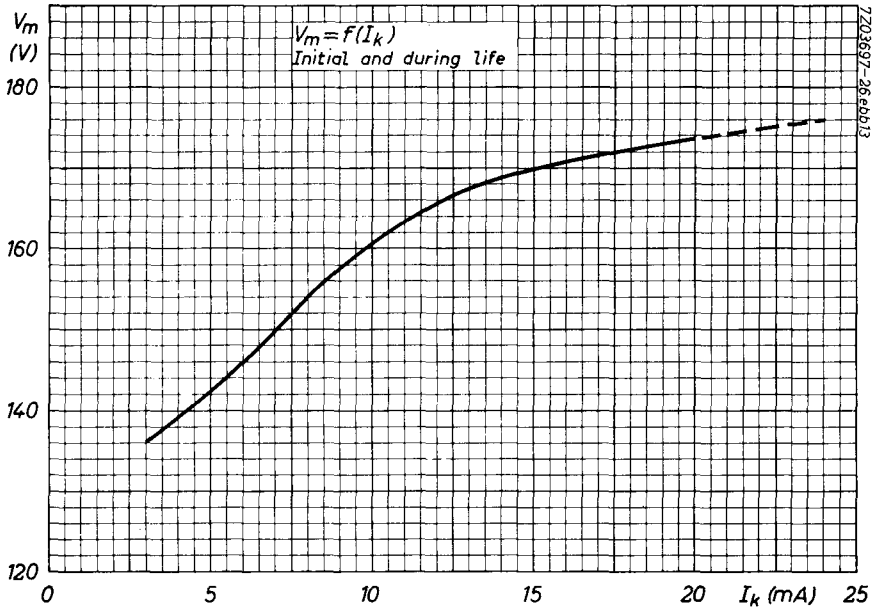
$V_m$
(V)
180
160
140
120
0
5
10
15
20
$I_k$ (mA)
25
$V_m = f(I_k)$
Initial and during life
7Z03697-26.6.6.13

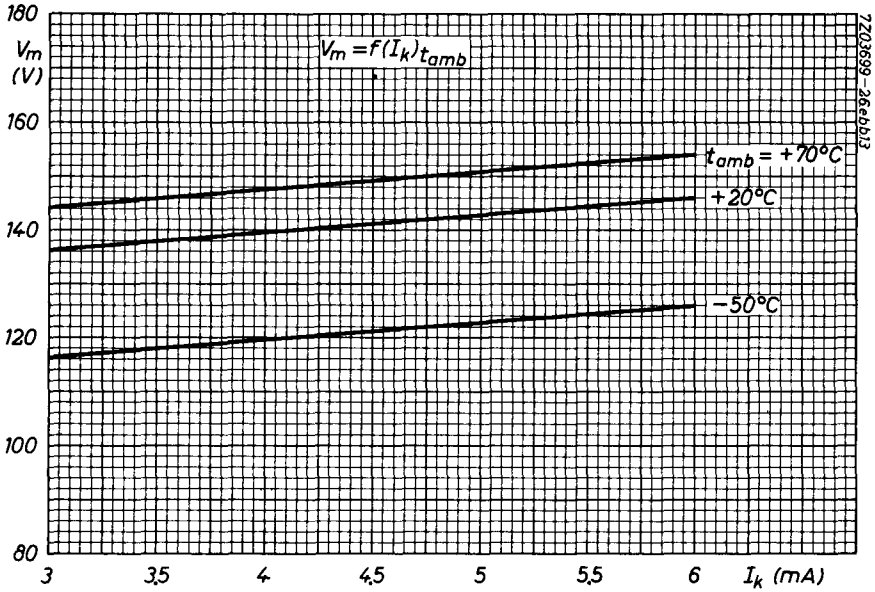
180
$V_m$
(V)
160
140
120
100
80
$V_m = f(I_k)_{t_{amb}}$
$t_{amb}$ = +70°C
+20°C
−50°C
3
3,5
4
4,5
5
5,5
6
$I_k$ (mA)
7Z03699-26eb613