SELECTOR TUBE

Cold cathode gas-filled bi-directional decade selector and counting tube.
This tube has ten main cathodes, all of which are brought out separately.
The Z505S gives visual indication and operates at speeds up to 50 kHz.

QUICK REFERENCE DATA			
Maximum counting speed		50	kHz
Supply voltage	V_{ba}	500	V
Output, current		800	μA
voltage		24	V
Indication		position of glow; end viewing	

DIMENSIONS AND CONNECTIONS

Base: B13B

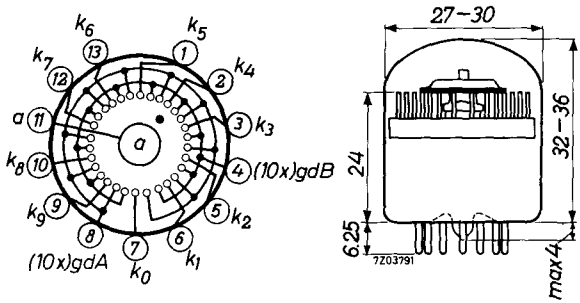

K_0 is aligned with pin 7 to within ± 3°

Mounting position: any

This tube has been designed to close tolerances so that no individual adjustment is necessary to align the bulb with the escutcheon.

Accessories

Socket	type	2422 505 00001
Escutcheon	type	55062

General note

All voltages are referred to the most positive supply potential to which any main cathode (not guide cathode) is returned.

CHARACTERISTICS AND RANGE VALUES FOR EQUIPMENT DESIGN

(initial and during life)

Ignition requirements				
Anode supply voltage	V_{ba}	400 to 1000		V
Time constant of rise of anode supply voltage		min.	2	ms [1]
Discharge at rest on a main cathode				
Maintaining voltage of anode to main cathode at I_a = 0.8 mA, V_{bgd} = 55 V				
maximum	V_m	max.	275	V
minimum	V_m	min.	240	V
Cathode current,				
recommended	I_k		0.8	mA
maximum	I_k	max.	1.0	mA
minimum	I_k	min.	0.6	mA
Guide supply voltage				
maximum	V_{bgd}	max.	65	V
minimum	V_{bgd}	min.	40	V
Resistance between guides and guide supply	R_{gd}	max.	22	kΩ
Cathode potential (except during reset)				
non conducting cathode	$-V_k$	max.	14	V
conducting cathode, positive	V_k	max.	28	V [2]
negative	$-V_k$	max.	0	V
Stepping requirements See also page 4				
Discharge dwell time,				
main cathode		min.	8.0	μs
Guide A		min.	6.0	μs
Guide B		min.	6.0	μs
Interval between trailing edge of guide A pulse and leading edge of guide B pulse (double rectangular pulse drive)		max.	0.3	μs
Guide voltage to step the discharge from a main cathode to an adjacent guide cathode	$-V_{gd}$	max. min.	80 30	V V

[1][2] See page 5

CHARACTERISTICS AND RANGE VALUES FOR EQUIPMENT DESIGN (continued)

Voltage difference required between a guide and the adjacent guide in order to step the discharge	V_{gd-gd}	max.	140	V
		min.	30	V [3]
Guide supply voltage to step the discharge from a guide to the next main cathode	V_{bgd}	max.	65	V
		min.	40	V
Cathode potential				
non conducting cathodes	$-V_k$	max.	14	V
conducting cathode, positive	V_k	max.	28	V [2]
negative	$-V_k$	max.	0	V
Resetting requirements [4]				
Cathode voltage	$-V_k$	max.	140	V
		min.	100	V [5]

LIFE

A typical tube can be expected to count correctly with the following conditions after standing on one main cathode for a period of approximately 4500 hours.

Anode current	I_a	0.8	mA
Guide supply voltage	V_{bgd}	60	V
Guide voltage for transfer	V_{gd}	-50	V
Output cathode (k_o) voltage,			
non conducting	V_o	5.0	V
conducting	V_o	-5.0	V
Guide A dwell time		6.0	μs
Guide B dwell time		6.0	μs
Cathode dwell time		8.0	μs
Temperature		20 ± 5	°C

[2] [3] [4] [5] See page 5

LIMITING VALUES (Absolute max. rating system)

Anode supply voltage	V_{ba}	max.	1000	V
Cathode current (except during reset)	I_k	max.	1.0	mA
Voltage between any two main or guide cathodes (except during reset)		max.	140	V
Guide supply voltage	V_{bgd}	max.	65	V
Reset voltage, negative		max.	140	V
Ambient temperature	t_{amb}	max.	50	°C [1])

GUIDE WAVEFORMS

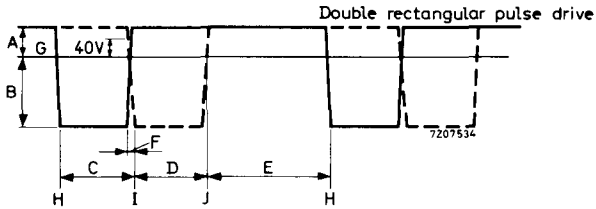

A Positive guide supply voltage

B Negative guide voltage

C Guide A dwell time

D Guide B dwell time

E Main cathode dwell time

F Interval between trailing edge of guide A pulse and leading edge of guide B pulse

G Potential of most positive main cathode supply voltage

H Discharge transfers from main cathode to guide A

I Discharge transfers from guide A to guide B

J Latest instant for discharge transfer from guide B to main cathode, dwell time $\leq$ 500 μs.

[1]) It is preferable to store the tube as near as possible to room temperature.

NOTES

1) If the power supply does not have a time constant of 2 ms as one of its characteristics, it can conveniently be obtained by inserting a resistor in series with the anode supply and a capacitor to the negative return.
(4.7 kΩ and 0.5 μF for 2 ms).

2) The maximum voltage difference between any two main cathodes except during reset must not exceed 28 V.

3) The adjacent guide (the cathode to which the discharge is being transferred) must also be 30 V negative with respect to the most positive main cathode supply voltage.

4) The high current which passes during reset should not be allowed to flow more than a few seconds.

5) If the cathode current falls below 0.7 mA when the guide voltage applied to the tube approaches the minimum value of 40 V the negative voltage required for resetting may rise to 110 V.

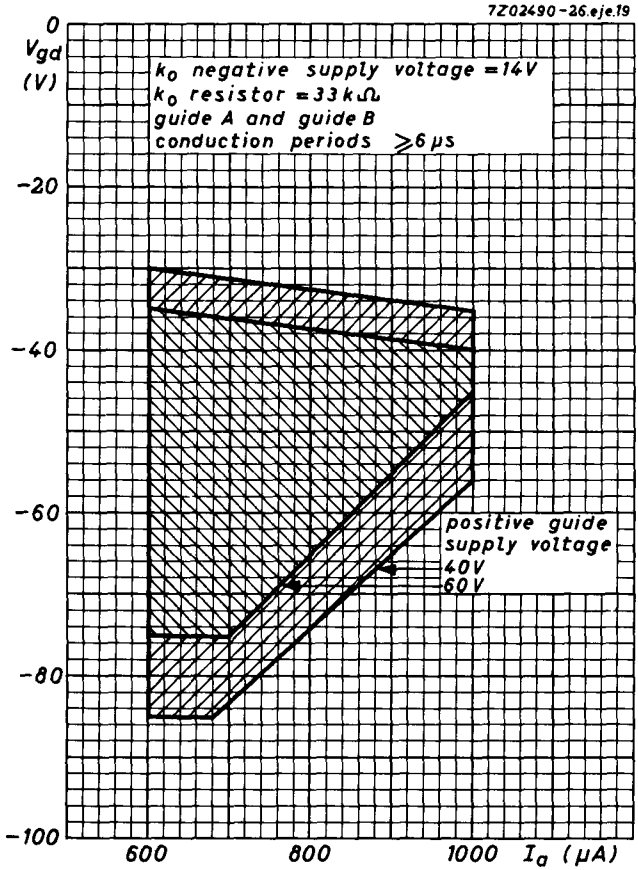

Guide voltage to ensure stepping.
The area of operation is increased with the use of larger pulse periods

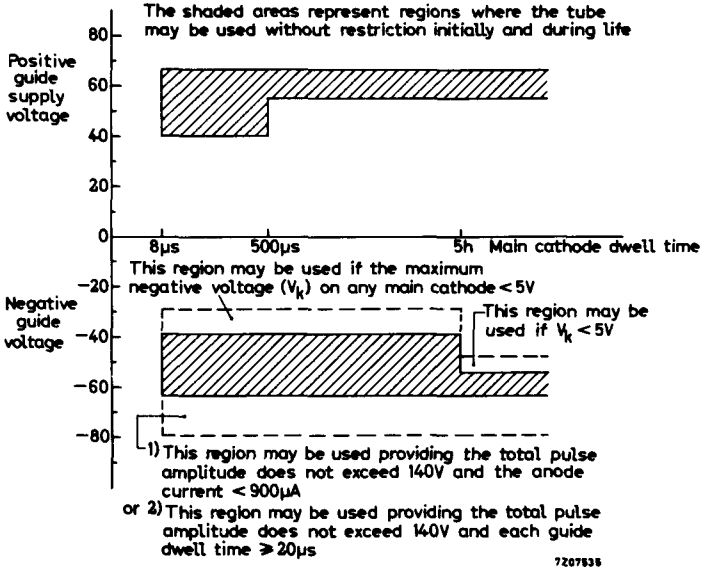

Guide operating voltages