U.H.F Power Klystrons

Provisional Data

Z153/50Z
Z163/50Z
Z173/50Z

These klystrons are intended for use as final amplifiers in the vision and sound sections of u.h.f. t.v. transmitters: they are also suitable for t.v. transposer service.

The tubes are of the four-integral cavity type and are magnetically focussed. Incorporated is a modulating anode for beam current control which enables the tubes to be operated at lower power levels in sound transmitters whilst using the same beam voltage supply as the vision amplifier klystrons: in addition, the electrode may be used as a protective device for vision operation.

Each tube operates in an approved focus mount assembly, incorporating the focus electromagnet system in which the klystron will give the performance specified in these data sheets.

Whilst the three tubes have similar electrical characteristics and performances, each covers a different frequency range, as follows:

Klystron	Mount	Frequency range (MHz)
Z153/50Z	ZM153	470 to 598
Z163/50Z	ZM163	598 to 710
Z173/50Z	ZM173	710 to 854

In transmitters using a third klystron for combined vision and sound signals as an emergency reserve, the tubes are suitable for operation at 2,5kW peak sync. power output, where the vision/sound powers ratio is 5:1.

If required, the tubes can be supplied already broadband tuned for vision operation in specified channels.

A special feature of these tubes is that they are designed to fit into the existing sockets of the following ITT external-cavity klystrons, or the sockets of similar tubes of other manufacturers which use the same types of mount assemblies:

Z151/50Z used in ZM151 mount
Z161/50Z used in ZM161 mount
Z171/50Z used in ZM171 mount

The conversion of existing mounts to accept the Z153/50Z series of tubes can be effected very simply by the use of available small kits of accessories.(See page 10).

Abridged Data

Power output, saturated	(kW)	15
Power gain, typical	(dB)	43
Bandwidth	(MHz)	8,0
Beam voltage	(kV)	13
Output connection		
special quick-fit for EIA 1,625 inch rigid coaxial line (50Ω)		
Cooling		
collector		vapour
gun and tube body		forced air

Cathode/Heater

Cathode		indirectly heated
Heater voltage, min. (Note1)	(V)	5,0
Heater current range	(A)	38 to 44
Heater starting current, peak, max.	(A)	84
Cathode heating time	(min)	5,0

Note 1. New tubes should be operated at 5,0V. Heater voltage may have to be increased to 5,5V max. as life progresses.

July 1972

Z153/50Z
Z163/50Z-1
Z173/50Z

© 1972 International Telephone and Telegraph Corporation

MAXIMUM (ABSOLUTE) RATINGS (No individual rating should be exceeded)

Beam voltage, continuous	(kV)	14
Beam current, mean	(A)	3,5
Body current		
with zero input power	(mA)	50
at saturated power output	(mA)	150
Power output, saturated	(kW)	18
Collector dissipation	(kW)	45
Load VSWR (Note 2)		1,5:1

Note 2. Tubes will operate at this figure without damage but satisfactory t.v. operation can be assured only if load VSWR does not exceed 1,1:1 .

TYPICAL OPERATING CONDITIONS — Television Vision Amplifier Service (For T.V. transmitter giving sync. power output of 12,5kW)

Z153/50Z in ZM153 Mount

Frequency range	(MHz)	470-478	526-534	590-598
Channel		21	28	36
Beam voltage	(kV)	13	13	13
Beam current	(A)	3,0	3,0	3,0
Modulating anode voltage	(kV)	13	13	13
Modulating anode current	(mA)	1,0	1,0	1,0
Electromagnet current (Note 3)	(A)	12,2	11,8	11,5
Bandwidth (Notes 4,5)	(MHz)	8,0	8,0	8,0
Body current (Note 6)				
with zero input power	(mA)	15	14	13
black level, +sync. (11kW)	(mA)	24	23	21
at 12,5kW c.w. output, vision frequency	(mA)	30	34	36
Drive power (Notes 7,8)				
at 12,5kW output	(W)	0,45	0,35	0,35
at 10kW output	(W)	0,32	0,27	0,27
Power gain (Note 8)	(dB)	44,4	45,5	45,5
Differential gain (Notes 4,9)	(%)	74	72	70
Differential phase (Notes 4,10)	(o)	6,5	4,5	5,0
AM noise (Note 11)	(dB)	60	60	60
Linearity (Notes 4,12)	(%)	74	73	72
Power output, saturated (Note 8)	(kW)	16	15,5	15
Efficiency (Notes 8,13)	(%)	32	32	32

(Notes are given on pages 8 and 9)

Z163/50Z in ZM163 Mount

Frequency range	(MHz)	598-606	654-662	702-710
Channel		37	44	50
Beam voltage	(kV)	13	13	13
Beam current	(A)	3,0	3,0	3,0
Modulating anode voltage	(kV)	13	13	13
Modulating anode current	(mA)	1,0	1,0	1,0
Electromagnet current (Note 3)	(A)	11	11,2	11,4
Bandwidth (Notes 4,5)	(MHz)	8,0	8,0	8,0

Z163/50Z in ZM163 Mount – continued

Body current (Note 6)				
with zero power input	(mA)	14	15	15
black level, +sync. (11kW)	(mA)	23	24	25
at 12,5kW c.w. output, vision frequency	(mA)	30	32	36
Drive power (Notes 7,8)				
at 12,5kW output	(W)	0,45	0,35	0,34
at 10kW output	(W)	0,33	0,28	0,27
Power gain (Note 8)	(dB)	44,4	45,5	45,6
Differential gain (Notes 4,9)	(%)	73	76	74
Differential phase (Notes 4,10)	(°)	7,0	4,5	5,6
AM noise (Note 11)	(dB)	60	60	60
Linearity (Notes 4,12)	(%)	75	77	76
Power output, saturated (Note 8)	(kW)	16	16,5	16
Efficiency (Notes 8,13)	(%)	32	32	32

Z173/50Z in ZM173 Mount

Frequency range	(MHz)	710-718	782-790	846-854
Channel		51	60	68
Beam voltage	(kV)	13	13	13
Beam current	(A)	3,0	3,0	3,0
Modulating anode voltage	(kV)	13	13	13
Modulating anode current	(mA)	1,0	1,1	0,8
Electromagnet current (Note 3)	(A)	11	11,2	11,2
Bandwidth	(MHz)	8,0	8,0	8,0
Body current (Note 6)				
with zero input power	(mA)	12	14	15
black level, +sync. (11kW)	(mA)	17	21	24
at 12,5kW c.w. output, vision frequency	(mA)	30	33	34
Drive power (Notes 7,8)				
at 12,5kW output	(W)	0,4	0,35	0,3
at 10kW output	(W)	0,32	0,27	0,23
Power gain (Note 8)	(dB)	44,9	45,5	46,1
Differential gain (Notes 4,9)	(%)	70	70	72
Differential phase (Notes 4,10)	(°)	5,0	4,5	6,5
AM noise (Note 11)	(dB)	61	60,7	61
Linearity (Notes 4,12)	(%)	70	70	75
Power output, saturated (Note 8)	(kW)	14,5	14,5	16
Efficiency (Notes 8,13)	(%)	32	32	32

(Notes are given on pages 8 and 9)

TYPICAL OPERATING CONDITIONS—Television Sound Amplifier Service (For T.V. transmitter giving 2,5kW power output) (Note 16)

Z153/50Z in ZM153 Mount

Frequency range	(MHz)	470-478	526-534	590-598
Channel		21	28	36
Beam voltage	(kV)	13	13	13
Beam current	(A)	0,65	0,65	0,65
Modulating anode voltage	(kV)	4,6	4,6	4,6
Modulating anode current	(mA)	0	0	0
Electromagnet current (Note 3)	(A)	10	10,1	10,3
Bandwidth to 1,0dB points (Note 14)	(MHz)	0,5	0,5	0,5
Body current (Note 15)				
with zero power input	(mA)	5,0	5,4	5,0
at 2,5kW power output, sound frequency	(mA)	7,0	7,5	7,3
Drive power (Note 7)				
at 2,5kW power output	(W)	0,08	0,10	0,09
Efficiency, min.	(%)	30	30	30

(Notes 3 to 15 are given on pages 8 and 9).

Z163/50Z in ZM163 Mount

Frequency range	(MHz)	598-606	654-662	702-710
Channel		37	44	50
Beam voltage	(kV)	13	13	13
Beam current	(A)	0,65	0,65	0,65
Modulating anode voltage	(kV)	4,6	4,6	4,6
Modulating anode current	(mA)	0	0	0
Electromagnet current (Note 3)	(A)	10,3	10,2	10,3
Bandwidth (Note 14)	(MHz)	0,5	0,5	0,5
Body current (Note 15)				
with zero input power	(mA)	5,0	4,5	3,5
at 2,5KW output, sound frequency	(mA)	8,0	8,5	9,0
Drive power (Note 7)				
at 2,5kW output	(W)	0,09	0,11	0,10
Efficiency, min.	(%)	30	30	30

Z173/50Z in ZM173 Mount

Frequency range	(MHz)	710-718	782-790	846-854
Channel		51	60	68
Beam voltage	(kV)	13	13	13
Beam current	(A)	0,65	0,65	0,65
Modulating anode voltage	(kV)	4,6	4,5	4,55
Modulating anode current	(mA)	0	0	0
Electromagnet current (Note 3)	(A)	10,4	10,5	10,7
Bandwidth (Note 14)	(MHz)	0,5	0,5	0,5

Z173/50Z in ZM173 Mount – continued

Body current (Note 15)				
with zero input power	(mA)	4,0	4,5	3,0
at 2,5kW input power, sound frequency	(mA)	8,0	9,5	8,7
Drive power (Note 7)				
at 2,5kW power output	(W)	0,11	0,14	0,13
Efficiency, min.	(%)	30	30	30

TYPICAL OPERATING CONDITIONS — Television Combined Vision and Sound Service (For T.V. transmitter giving power outputs of 2,25kW vision and 0,45kW sound)

Information regarding operation at reduced power levels is available on request from the manufacturer.

Z153/50Z in ZM153 Mount

Frequency	(MHz)	470-478	526-534	590-598
Channel		21	28	36
Beam voltage	(kV)	12,5	12,5	12,5
Beam current	(A)	2,9	2,9	2,9
Modulating anode voltage	(kV)	12,5	12,5	12,5
Modulating anode current	(mA)	1,0	1,0	1,0
Electromagnet current (Note 3)	(A)	10,8	11,2	11,4
Bandwidth (Note 17)	(MHz)	8,0	8,0	8,0
Body current				
with zero input power	(mA)	10	11	12,5
at 2,5kW output, vision frequency	(mA)	11,5	13	14
Drive power (Notes 8,18)				
at 2,5kW power output	(W)	0,1	0,12	0,11
Intermodulation products (Note 19)	(dB)	-50,5	-51	-51,5

Z163/50Z in ZM163 Mount

Frequency	(MHz)	598-606	654-662	702-710
Channel		37	44	50
Beam voltage	(kV)	12,5	12,5	12,5
Beam current	(A)	2,9	2,9	2,9
Modulating anode voltage	(kV)	12,5	12,5	12,5
Modulating anode current	(mA)	1,0	1,0	1,0
Electromagnet current (Note 3)	(A)	10,8	10,4	10,7
Bandwidth (Note 17)	(MHz)	8,0	8,0	8,0
Body current				
with zero input power	(mA)	11	12	11,5
at 2,5kW output, vision frequency	(mA)	12	13,5	12,8
Drive power (Notes 8,18)				
at 2,5kW power output	(W)	0,1	0,13	0,13
Intermodulation products (Note 19)	(dB)	-50,5	-51	-51,5

(Notes are given on pages 8 and 9)

TYPICAL OPERATING CONDITIONS — Television Combined Vision and Sound — continued

Z173/50Z in ZM173 Mount

Frequency	(MHz)	710–718	782–790	846–854
Channel		51	60	68
Beam voltage	(kV)	12,5	12,5	12,5
Beam current	(A)	2,9	2,9	2,9
Modulating anode voltage	(kV)	12,5	12,5	12,5
Modulating anode current	(mA)	1,0	1,2	1,5
Electromagnet current (Note 3)	(A)	10,4	10,8	11,2
Bandwidth	(MHz)	8,0	8,0	8,0
Body current				
with zero input power	(mA)	11	12,5	13
at 2,5kW output, vision frequency	(mA)	13	14	13,9
Drive power (Notes 8, 18) at 2,5kW power output	(W)	0,1	0,09	0,095
Intermodulation products (Note 19)	(dB)	-51,5	-51	-50,5

RANGE OF CHARACTERISTICS FOR EQUIPMENT DESIGN

Z153/50Z in ZM153 Mount — Vision Amplifier Service

Test Conditions

Heater voltage	(V)	5,0/5,5
Electromagnet current	(A)	9,0/13
Frequency range	(MHz)	470–598
Bandwidth (Note 5)	(MHz)	8,0
Power output (Note 23)	(kW)	12,5

Range of Characteristics

		min.	max.
Heater current	(A)	38	44
Beam voltage	(kV)	-	14
Body current (Note 6)	(mA)	-	150
Mod. anode current	(mA)	-	5,0
R.F. drive power (Note 7)	(W)	-	1,25
Efficiency (Note 13)	(%)	32	-

Z163/50Z in ZM163 Mount — Vision Amplifier Service

Test Conditions

Heater voltage	(V)	5,0/5,5
Electromagnet current	(A)	9,0/13
Frequency range	(MHz)	598–710
Bandwidth (Note 5)	(MHz)	8,0
Power output (Note 23)	(kW)	12,5

Range of Characteristics

		min.	max.
Heater current	(A)	38	44
Beam voltage	(kV)	-	14
Body current (Note 6)	(mA)	-	150
Mod. anode current	(mA)	-	5,0
R.F. drive power (Note 7)	(W)	-	1,25
Efficiency (Note 13)	(%)	32	-

Z173/50Z in ZM173 Mount — Vision Amplifier Service

Test Conditions

Heater voltage	(V)	5,0/5,5
Electromagnet current	(A)	9,0/13
Frequency range	(MHz)	710–854
Bandwidth (Note 5)	(MHz)	8,0
Power output (Note 23)	(kW)	12,5

Range of Characteristics

		min.	max.
Heater current	(A)	38	44
Beam voltage	(kV)	-	14
Body current (Note 6)	(mA)	-	150
Mod. anode current	(mA)	-	5,0
R.F. drive power (Note 7)	(W)	-	1,25
Efficiency (Note 13)	(%)	32	-

MECHANICAL DATA – Klystrons

	(mm.)	(in.)
Length overall, max.		
Z153/50Z		44,125
Z163/50Z		40,1
Z173/50Z		40,1
Diameter overall, max.		
Weight, nett., approx.	(kg)	(lb)
Z153/50Z	84	185
Z163/50Z	75	165
Z173/50Z	57	125

Mounting position, all tubes vertical, collector downwards

MOUNT ASSEMBLIES – General Data

Electromagnet		
voltage	(V)	100
current (Note 24)	(A)	9,0/13
resistance at 20°C ambient		
cold	(Ω)	5,7
hot	(Ω)	7,3

R.F. connectors

input Type N coaxial panel jack (50Ω); mates with UG-21D/U or equivalent

output Special quick-fit for EIA 1,625in. rigid 50Ω line or 3,125in. coaxial line if preferred

Weight of assembly, nett. approx.	kg	lb
ZM153	354	780
ZM163	354	780
ZM173	354	780

COOLING DATA

Volume of steam produced by collector dissipation	(m^3/min/kW)	0,043
	(ft^3/min/kW)	1,5
Volume of water converted into steam	(l/min/kW)	0,027
	(UK gal/min/kW)	0,006
Boiler feed water for operation at 12,5kW peak sync. output, min.	(l/min)	2,27
	(UK gal/min)	0,5
Air flow for gun envelope and tube body, min. (Note 25)	(m^3/min)	2,83
	(ft^3/min)	100
Static pressure head (water gauge) at 2,83m^3/min. (100ft^3/min) (Note 26)	(mm)	51
	(in)	2,0
Inlet air temperature, max.	(°C)	45
Max. permissible temperature of any part of klystron	(°C)	175

(Notes are given on pages 8 and 9)

Notes

Note 3. Individual tubes should be operated at the value specified in the test data sheet supplied with the tube.

Note 4. For the purpose of defining bandwidth, differential gain and differential phase, the following carrier output amplitude levels are assumed:

Peak sync. level	100%
Black level	76%
Peak white level	20%

Note 5(a). The klystron broadband response will be adjusted by using a c.w. swept input signal corresponding to mid-grey output level (42% of carrier amplitude) so that the portion of the band 3,0MHz either side of the band centre at f_v + 2,0MHz shall be level to within ± 0,5dB of the level at f_v. Band edges at f_v - 2,0MHz and f_v + 6,0MHz shall be within the range 0,5dB to -1,0dB of the level at f_v.

Note 5(b). As the amplitude of the swept input is varied between the levels corresponding to white and sync. level at the output of the klystron, the portion of the band 3,0MHz either side of the band centre shall remain within ±1,0dB of the level at f_v.

Note 6. When vision and sound klystrons are operated from a common h.t. supply a combined body current max. value of 150mA applies. However, for normal operation with a composite programme signal consisting of peak sync. pulses, blanking level and picture information, the combined body currents should be less than 50mA; if it is greater than this, operating conditions should be carefully checked to detect abnormal adjustments.

Note 7. Defined as the power delivered to a matched load substituted for the input terminal of the klystron.

Note 8. For full specified performance at 12,5kW, saturated output power is typically 14kW. If the klystron is required to be used as a c.w. amplifier, the maximum permitted output power is 8,0kW.

Note 9. With a test wave-form similar to that described in Note 12, but with sine waves of 4,43MHz and peak-to-peak amplitude of 10% of black to white separation, superimposed on each step of the staircase from black level to peak white, the ratio of the minimum to maximum amplitude of the sine waves, after passing the demodulated waveform at the output of the klystron through a suitable band-pass filter, shall not be less than 0,7. The results obtained from these tests will be in the form of a smooth curve of varying slope and without inflections greater than 3%.

Note 10. Phase response. With the test wave-form described in Note 9 above, the phase of the 4,43MHz sine wave signal on any step shall not differ by more than 10% from the 4,43MHz signal at black level. The results obtained from this test will be in the form of a smooth curve of varying slope and without inflections greater than 2°.

Note 11. A.M. noise. There shall be no random or periodic noise generated within the klystron and having a level greater than -60dB as measured as a peak-to-peak voltage referred to the rectified

level of the peak sync. signal. With the focus current adjusted for minimum noise, the -60dB performance will hold over a range of ±5% of the focus current optimum value.

Note 12. Linearity. The linearity of the klystron, when operating at a peak sync. output power level of 12,5kW, will be such that a video test waveform consisting of a 10-step staircase from black to white level occurring on each line, the ratio of the minimum step amplitude to maximum step amplitude measured at the output of the klystrons, will not be less than 0,65. The results obtained from these tests will be in the form of a smooth curve of varying slope and with no inflections greater than 3%. The linearity of the output characteristic, measured as above, shall not vary by more than 1% for any setting of the focus current within ±2% of the recommended current.

Note 13. Minimum efficiency at 12,5kW output under typical conditions.

Note 14. Output shall be level to ±0,5dB for 250kHz either side of the carrier.

Note 15. See Note 6. 50mA applies to a single sound klystron.

Note 16. In order to economically operate vision and sound klystrons from a common h.t. supply, but with sound output at one fifth of the vision output, it is usual to operate the sound klystron with its beam current reduced to approx. one fifth that of the vision klystron. This is accomplished by operating the modulating anode at reduced voltage. Any potential divider network used to supply the modulating anode must allow for a possible variation in modulating anode current between 0 and 1,5mA.

Note 17. The klystron response will be adjusted as in Note 5(a), but additionally the response at f_v+6,0MHz will be within ±0,5dB of the level at f_v. Variation of the response with swept level will be as in Note 5(b), but additionally the response at f_v+6,0MHz will be within ±1,0dB of the level at f_v.

Note 18. Drive power for 2,5kW peak sync. vision signal.

Note 19. The intermodulation products are measured by using a test signal comprising three c.w. tones at the following levels:

Vision frequency f_v	-8,0dB
Sound frequency f_v+6,0MHz	-7,0dB
Colour sub-carrier f_v+4,43MHz	-17dB

The signal is adjusted to give the above levels at the klystron output. The levels are referred to the 2,25kW peak sync. power level.

The maximum level of -50dB applies to all I.P.'s in the frequency range f_v-1,75MHz to f_v+6,0MHz.

Note 20. New tubes should be operated at 5,0V. Heater voltage may require to be increased as life progresses.

Note 21. Cooling air must be filtered to reduce precipitation of dust.

(continued)

Notes–continued

Note 22. The klystron is so tuned that for constant input power the variation in output power is less than 1,0dB over the specified bandwidth at all power levels between -2,0dB and -14dB with respect to the specified output.

Note 23. Input frequency is set to 2,75MHz below the centre of the 8,0MHz channel, and the input and beam powers adjusted to give the specified output.

Note 24. The magnet supply should be current regulated so that as the magnet coils warm up, the magnet current remains constant to within 2% of the value specified for the individual tube on the test data sheet supplied with each tube.

Note 25. Cooling air must be filtered to reduce precipitation of dust.

Note 26. Measured at input to mount assembly.

Retrofit Conversion Kits

When, in existing equipment, it is desired to substitute the Z153/50Z, Z163/50Z or Z173/50Z for ITT types Z151/50Z, Z161/50Z and Z171/50Z respectively, (or tubes of similar type of other manufacturers), the associated mount assemblies can be quickly adapted for the purpose by the use of the following available conversion kits:

Z-CON153 - For substitution of Z151/50Z by Z153/50Z
Z-CON163 - For substitution of Z161/50Z by Z163/50Z
Z-CON173 - For substitution of Z171/50Z by Z173/50Z

Fig. 1 Typical Beam Characteristic

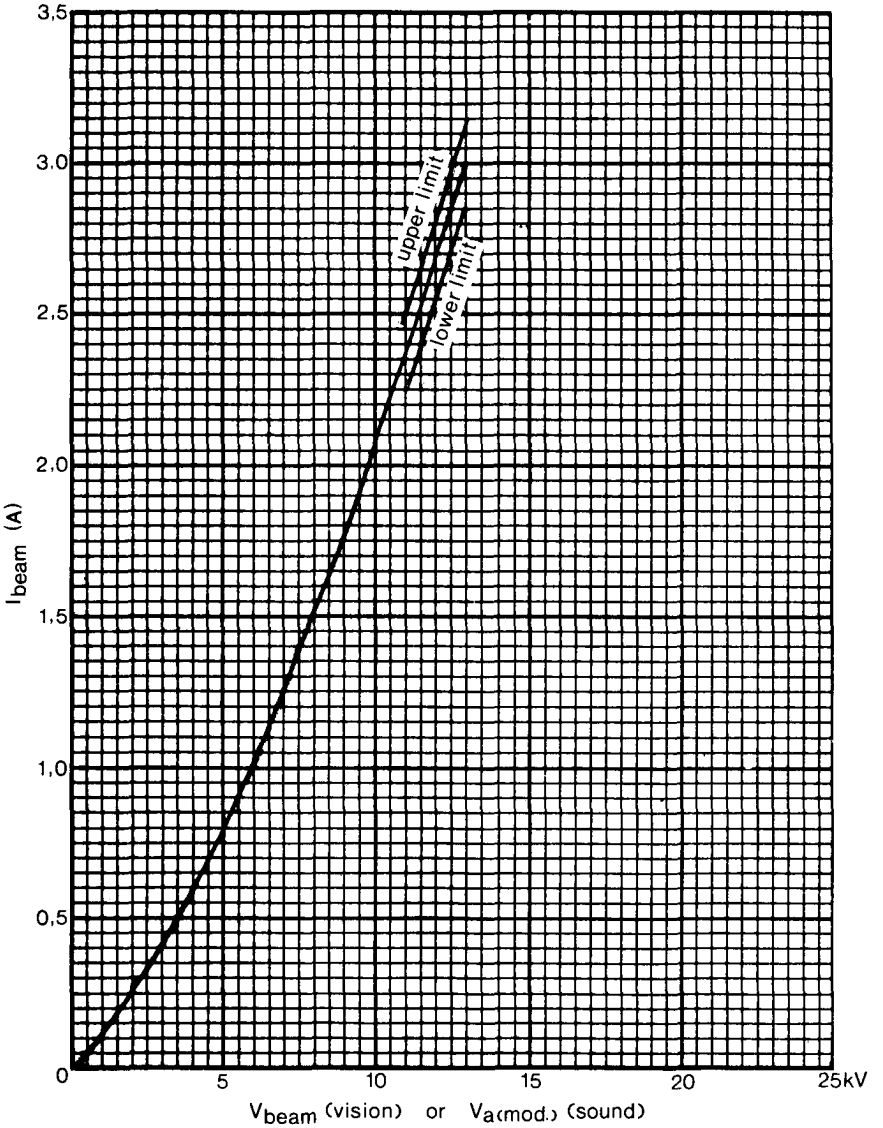

Fig. 2 Z173/50Z Klystron Outline

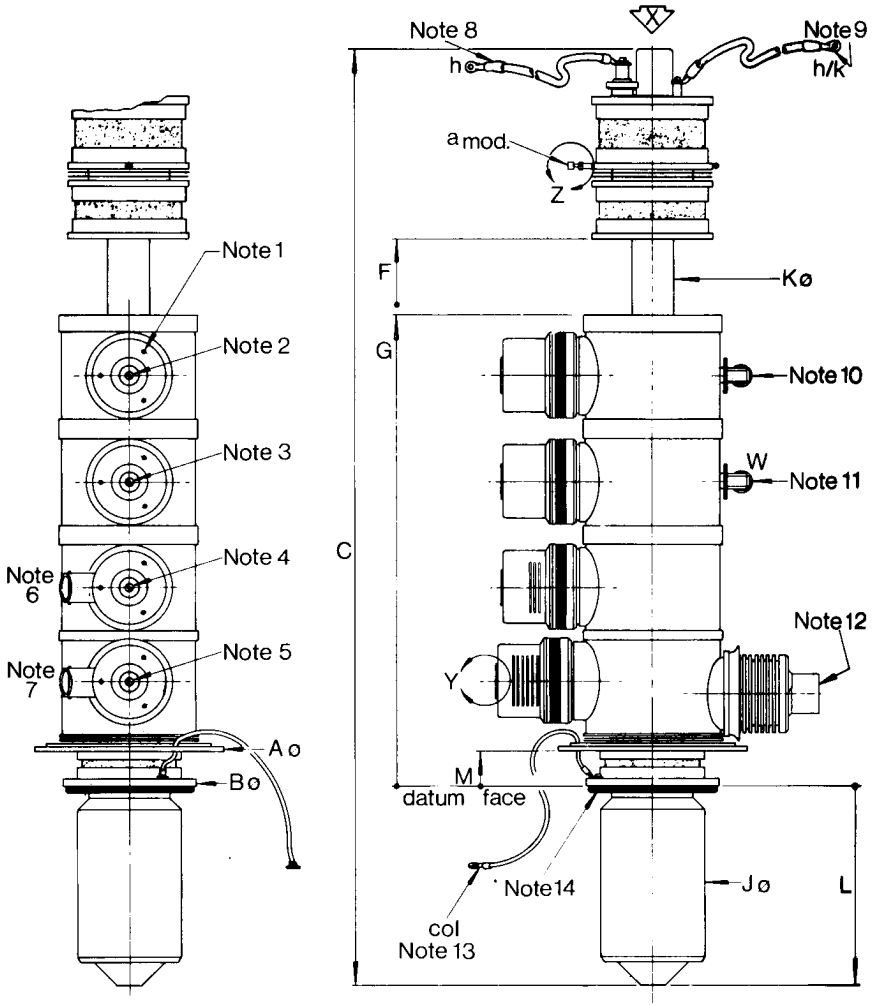

Fig. 2 Z173/50Z Klystron Outline — continued

Plan view at arrow X

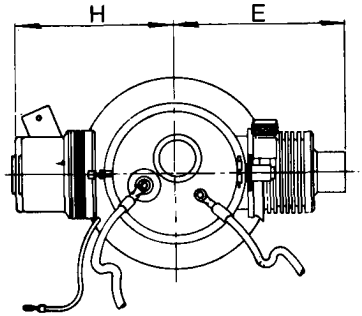

Detail W

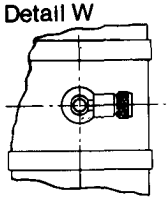

Detail Y

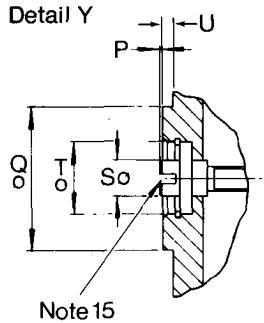

Detail Z

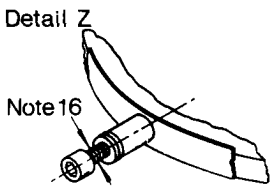

Notes

1. Three holes tapped 6-32 UNC-2B 0,312in. deep equispaced on D p.c.d., typical position tolerance 0,005in. dia.
2. Input cavity tuner adjuster.
3. Second cavity tuner adjuster.
4. Penultimate cavity tuner adjuster.
5. Output cavity tuner adjuster.
6. Air inlet.
7. Air inlet
8. Heater lead (red). Length 15in. min. Lug 0,25in. diameter.
9. Heater/cathode lead (black). Length 15in. min. Lug 0,312in. diameter.
10. R.F. input socket, type N (UG-21D/U).
11. R.F. load socket, type N (UG-21D/U).
12. R.F. output line.
13. Collector lead (green). Length 36in. min. 2BA terminal.
14. 'O' ring, size No. 428 to BS1806.
15. Slot N wide x R deep (cavity tuning screw).
16. Connecting lug, V diameter.

Dimensions

	mm	in.
A	203,2 max.	8,00 max.
B	142,87 ± 0,51	5,625 ± 0,02
C	1 018,5 max.	40,10 max.
D	60,33 t.p.	2,375 t.p.
E	179,3	7,05
F	590,8	23,26
G	508,3	20,01
H	165,1	6,50
J	111,13 ± 0,51	4,375 ± 0,02
K	44,45 ± 0,25	1,750 ± 0,01
L	216,0	8,50
M	38,23 ± 0,76	1,505 ± 0,03
N	2,44 + 0,10 − 0,00	0,096 + 0,004 − 0,000
P	0,8 max.	0,03 max.
Q	38,05 + 0,00 − 0,05	1,498 + 0,000 − 0,002
R	3,68 ± 0,25	0,145 ± 0,010
S	9,52 ± 0,40	0,375 ± 0,015
T	19,05 + 0,13 − 0,00	0,750 + 0,005 − 0,000
U	3,18 max.	0,125 max.
V	4,17 max.	0,164 max.

Fig. 3 Z173/50Z Klystron in ZM173 Mount Assembly

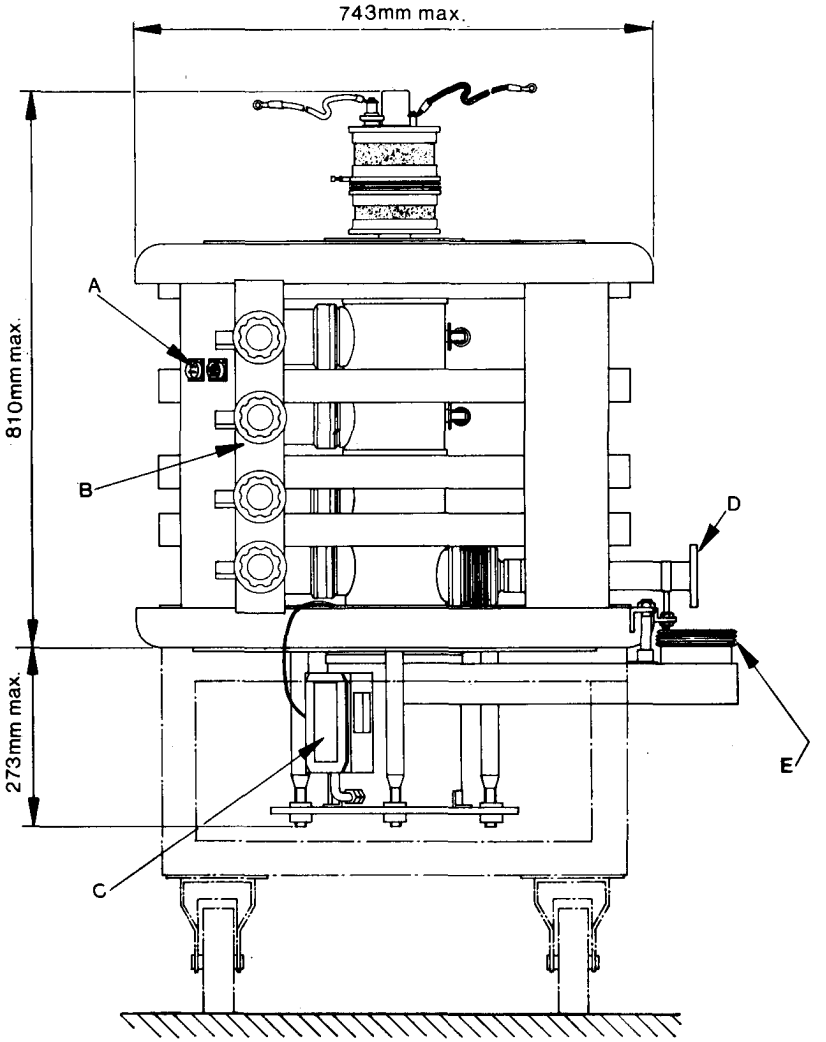

A. Magnet interlock connector.
B. Cavity tuner panel.
C. Level trip.
D. R.F. output.
E. Steam outlet.

ITT Components are available from

or directly from

ITT Components Group Europe
Standard Telephones and Cables Limited,
Valve Product Division,
Brixham Road,
Paignton, Devon. TQ4 7BE
Tel : 0803 - 50762 Telex : 42830

Printed by Lay-Press Ltd, England

ITT

ITT COMPONENTS GROUP EUROPE

Standard Telephones and Cables Limited
Edinburgh Way
HARLOW, Essex
Telephone : 0279-6 26811 (Harlow) Ext. 405 Telex : 81146

NEWS RELEASE

Date: 4 September 1972

No.: 2206E

NEW INTEGRAL CAVITY KLYSTRONS FROM ITT

A new range of u.h.f. television amplifier klystrons of the four integral-cavity type has been developed by ITT Components Group Europe. Coverage of frequency bands IV and V, from 470 MHz to 854 MHz, is provided by the three new models, which can be used for peak synchronous power outputs of up to 12,5kW.

These integral-cavity klystrons (Z153/Z163/Z173) offer considerable advantages over equivalent external-cavity types for which they are direct replacements. All tuning is done within the vacuum envelope thus eliminating periodic maintenance of the cavities, and the replacement of klystrons in their mounts is easier and quicker because of the integral construction.

Little or no adjustment is required prior to operation and if necessary channel changing can be made by cavity tuning only. Also, the input/output coupling and all cavity loadings are fixed, again to minimise tuning.

Levels of radiation from the klystron are significantly reduced with integral-cavity units, thus improving the overall stability of the transmitter in which they are installed. These klystrons have good long-term stability which makes them ideal for unattended, low maintenance operation. Typical turn-on powers of 97% of normal within 2min of h.t. application have been achieved in both vision and sound service.

For further information contact ITT Components Group Europe, Valve Product Division, Brixham Road, Paignton, Devon TQ4 7BE - telephone: Paignton (0803) 50762; telex: 42830.

Press contacts : **Tony Devereux/Roger Dence**

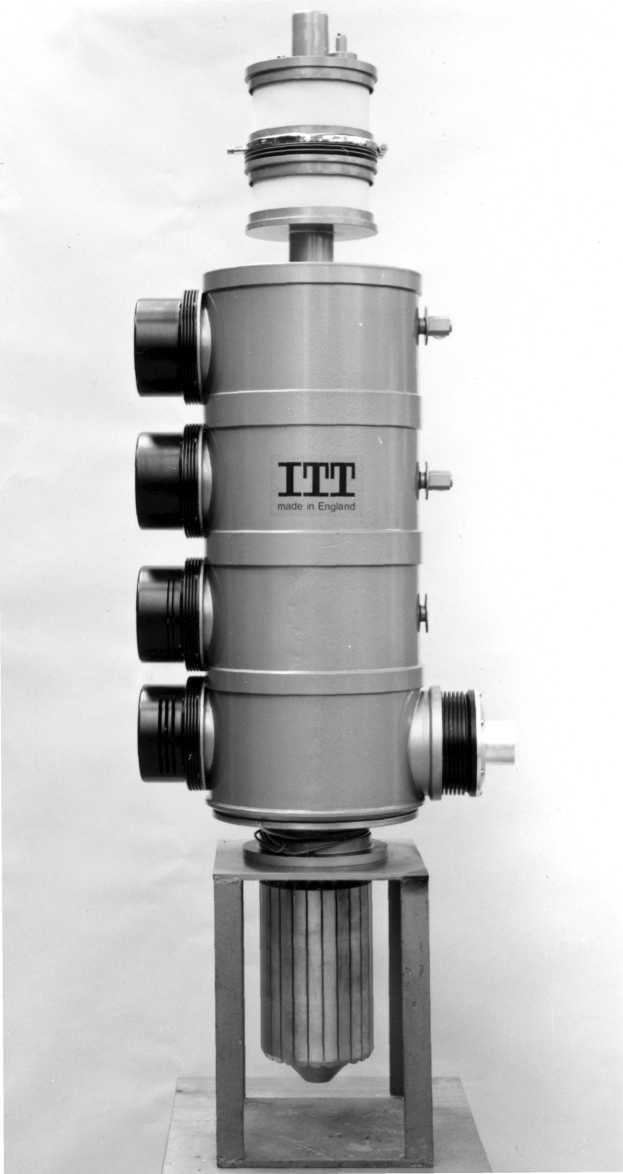
ITT
made in England