AIR COOLED R.F. POWER TRIODE

Forced-air cooled coaxial power triode in metal-ceramic construction primarily intended for use as a R.F. class AB linear broadband amplifier in TV transposer service at frequencies up to 1000 MHz.

QUICK REFERENCE DATA			
Transposer service (combined sound and vision)			
Frequency	f	470 to 860	MHz
Anode voltage	V_a	1900	V
Output power in load (sync)	W_ℓ	55	W
Power gain	G	19	dB

HEATING : indirect by a.c. or d.c.; oxide coated cathode.

Heater voltage	V_f		5	V±5% [1]
Heater current	I_f		2,1	A
Cathode heating time	T_h	min.	120	s

CAPACITANCES

Anode to grid	C_{ag}	3,5	pF
Grid to cathode and heater	$C_{g/kf}$	17	pF
Anode to cathode and heater	$C_{a/kf}$	0,05	pF

TYPICAL CHARACTERISTICS

Anode voltage	V_a	1900	V
Anode current	I_a	180	mA
Transconductance	S	60	mA/V
Amplification factor	μ	200	

TEMPERATURE LIMITS

Absolute max. seal temperature	t_s	max.	150	°C
Absolute max, anode temperature at reference point	t_a	max.	100	°C

[1]) For optimum transposer performance (linearity) ±2%.

COOLING

Forced air

W_a (W)	t_i (°C)	q_{min} (l/min)	p_i (mm H_2O)
325	up to	550	56
275	45	400	33

Recommended airduct see page 4.

MECHANICAL DATA

Dimensions in mm

Net weight : approx. 290 g

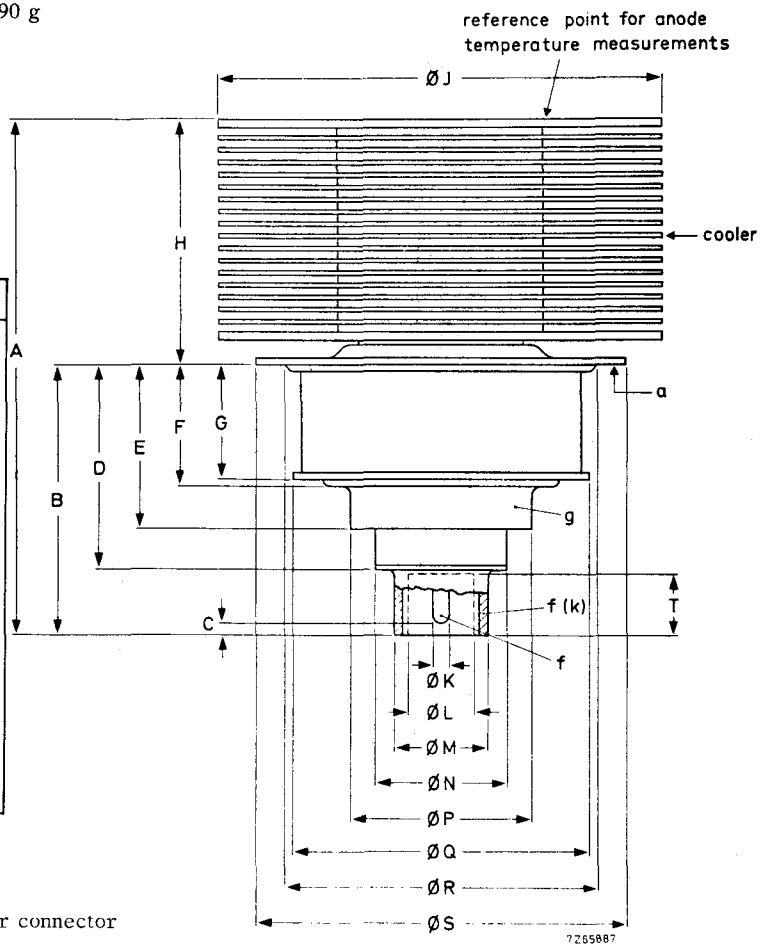

	min.	max.
A	61,2	64,2
B	32,2	34,2
C	0,9	2,3
D	25,0	26,4
E	19,9	21,9
F	14	15
G	13,5	14,5
H	29	30
J	53,9	54,1
K	1,9	2,1
L[1])	8	
M	11,3	11,7
N	15,8	16,4
P	22,6	23,0
Q	35,8	36,2
R	38	39
S	44,6	45,4
T[1])	7,5	

[1]) Available for heater connector

R.F. CLASS AB AMPLIFIER FOR TV TRANSPOSER SERVICE, grounded grid

LIMITING VALUES (Absolute max. rating system)

Frequency	f	up to	1000	MHz
Anode voltage	V_a	max.	2000	V
Grid voltage	$-V_g$	max.	50	V
Anode dissipation	W_a	max.	325	W
Grid current	I_g	max.	5	mA
Cathode current	I_k	max.	250	mA

OPERATING CONDITIONS, grounded grid

		CCIR standard G [1]	
Frequency	f	470 to 860	MHz
Bandwidth (-1 dB)	B	9	MHz
Anode voltage	V_a	1900	V
Grid voltage [2]	V_g	-6,6	V
Grid current	I_g	≈ 0	mA
Anode current, no signal	I_a	130	mA
Anode current at zero dB level (vision carrier)	I_a	180	mA
Driving power (sync)	W_{dr}	0,7	W
Output power in load	W_ℓ	55	W
Power gain	G	19	dB
Intermodulation products [3]	d	-54	dB
Differential phase [4]		2	o
Differential gain [4]		96	%

---

1) Negative modulation, positive synchronization, combined sound and vision.

2) To be adjusted for the stated no-signal anode current.

3) Three-tone test method (vision carrier -8 dB, sound carrier -7 dB, sideband signal -16 dB with respect to the sum signal amplitude of the composite signal).
Stated figure applies to a vision to sound power ratio of 5 : 1.
For a vision to sound power ratio of 10 : 1 : IM products ≤ -56 dB.

4) Measured with a saw-tooth amplitude running from 17 % to 75 % of the peak sync value, with superimposed a 4,43 MHz sinewave with a 10 % peak-to-peak value.

Recommended airduct

Dimensions in mm

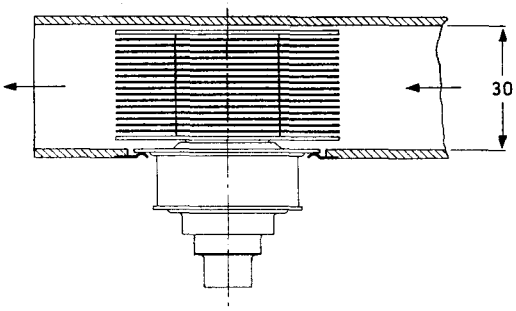

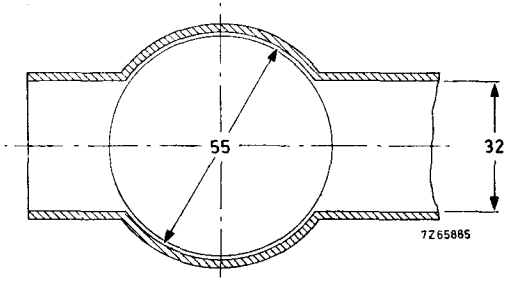

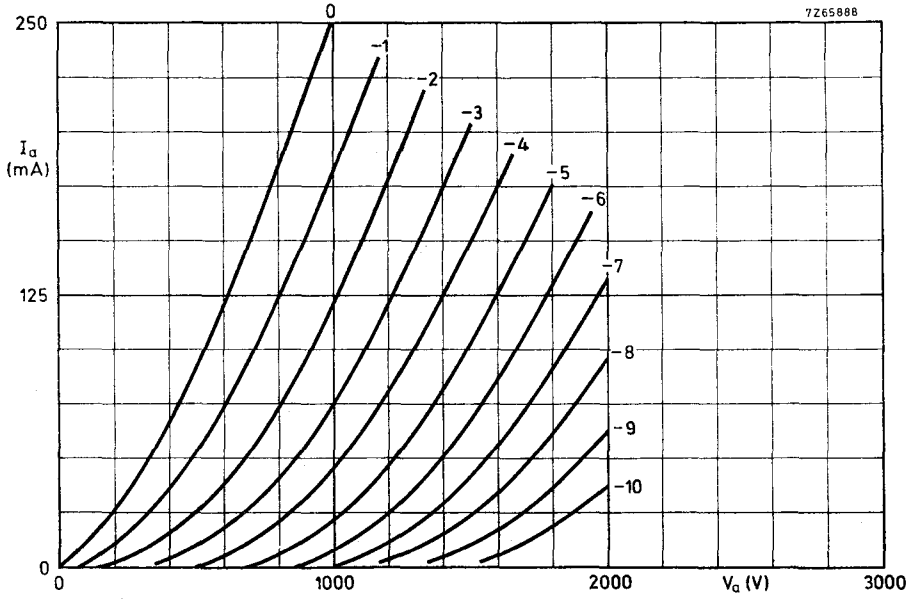

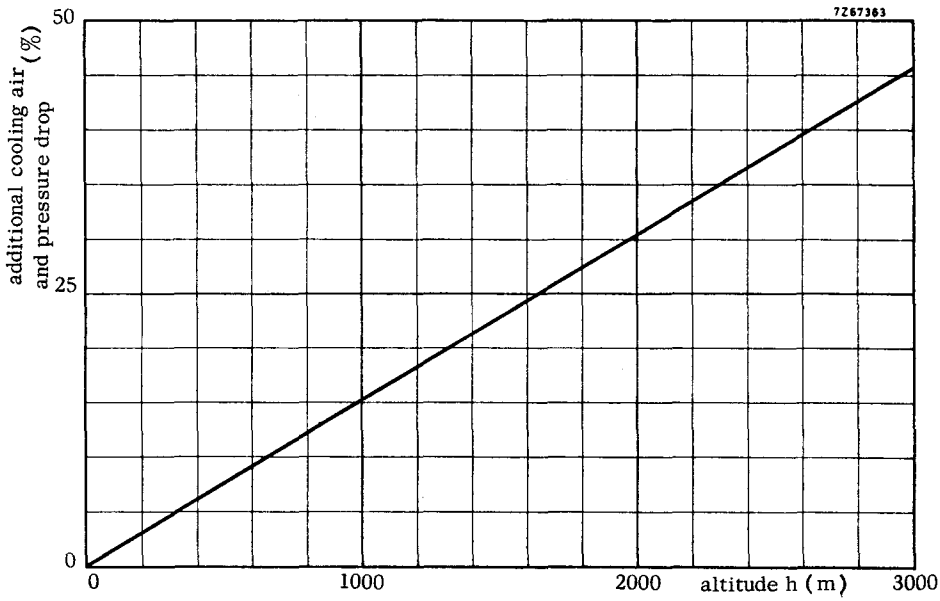
7Z67363
50
25
0
additional cooling air (%)
and pressure drop
0
1000
2000
altitude h (m)
3000