RF POWER TRIODE

Air-cooled triodes of metal-ceramic construction with integral cooler intended for use as industrial oscillators.

QUICK REFERENCE DATA

Oscillator output power (W_o-W_{feedb}), typical	W_{osc}		2,67	kW
Frequency for full ratings	f	max.	250	MHz*

To be read in conjunction with "General Operational Recommendations".

RF CLASS C OSCILLATOR FOR INDUSTRIAL USE

OPERATING CONDITIONS

Frequency	f	160	27,12	MHz
Filament voltage	V_f	6,0	6,3	V
Oscillator output power (W_o-W_{feedb})	W_{osc}	2,22	2,67	kW
Anode voltage	V_a	4,5	5,0	kV
Anode current	I_a	700	750	mA
Anode input power	W_{ia}	3,15	3,75	kW
Anode dissipation	W_a	0,75	0,83	kW
Anode output power	W_o	2,4	2,9	kW
Anode efficiency	η_a	76	78	%
Oscillator efficiency	η_{osc}	71	71	%
Feedback ratio	V_{gp}/V_{ap}	17	17	%
Grid resistor	R_g	2,2	2,2	kΩ
Grid current, on load	I_g	225	235	mA
Grid voltage, negative	$-V_g$	495	517	V
Grid dissipation	W_g	70	80	W
Grid resistor dissipation	W_{Rg}	111	121	W

* When used at frequencies above 160 MHz consult the manufacturer for more detailed information.

LIMITING VALUES (Absolute maximum rating system)

Frequency for full ratings	f	up to	250	MHz
Anode voltage	V_a		5,5	kV
Anode current	I_a		1,1	A
Anode input power	W_{ia}		6,0	kW
Anode dissipation	W_a		1,5	kW
Grid voltage	$-V_g$		1,0	kV
Grid current				
on load	I_g		280	mA
off load	I_g		400	mA
Grid dissipation	W_g		150	W
Grid circuit resistance	R_g		20	kΩ
Cathode current				
mean	I_k		1,4	A
peak	I_{kp}		8	A
Envelope temperature	T_{env}		240	°C

HEATING: direct; filament thoriated tungsten

Filament voltage			
$f \leqslant 120$ MHz	V_f	6,3	V
$f > 120$ MHz	V_f	6,0	V
Filament current at $V_f = 6,3$ V	I_f	33	A

The filament is designed to accept temporary fluctuations of + 5% and −10%.

It is extremely important that the filament be properly decoupled. This should be done so that the resonance of the circuit formed by the filament and the decoupling elements remain below the fundamental oscillator frequency. In grounded-grid circuits this resonance should be below the grid-cathode resonance. For further information please see Application Book "Tubes for RF heating" or contact the manufacturer.

CAPACITANCES

Anode to filament	C_{af}	0,4	pF
Grid to filament	C_{gf}	17	pF
Anode to grid	C_{ag}	14	pF

CHARACTERISTICS measured at $V_a = 2,0$ kV, $I_a = 0,5$ A

Transconductance	S	10	mA/V
Amplification factor	μ	20	

COOLING

See cooling curves.

A low velocity air flow directed to the seals may be required.

To obtain optimum life, the temperature of the seals and of the envelope should, under normal operating conditions, be kept below 200 °C.

To maintain these temperatures additional cooling may be necessary. At frequencies higher than about 4 MHz cooling of the seals becomes mandatory.

ACCESSORIES

Filament connector	type 40688
Filament/cathode connector	type 40689
Grid connector	type 40686

MECHANICAL DATA

Dimensions in mm

YD1240

Mounting position: vertical with anode up or down

Net mass: approx. 1,3 kg

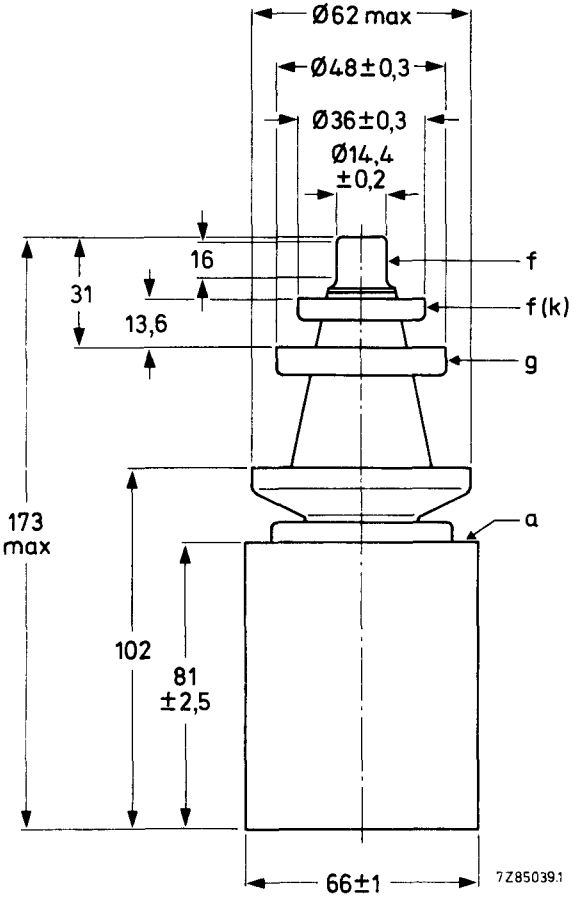

Fig. 1 Mechanical outline – YD1240.

YD1244

Dimensions in mm

Mounting position: vertical with anode up or down

Net mass: approx. 1,4 kg

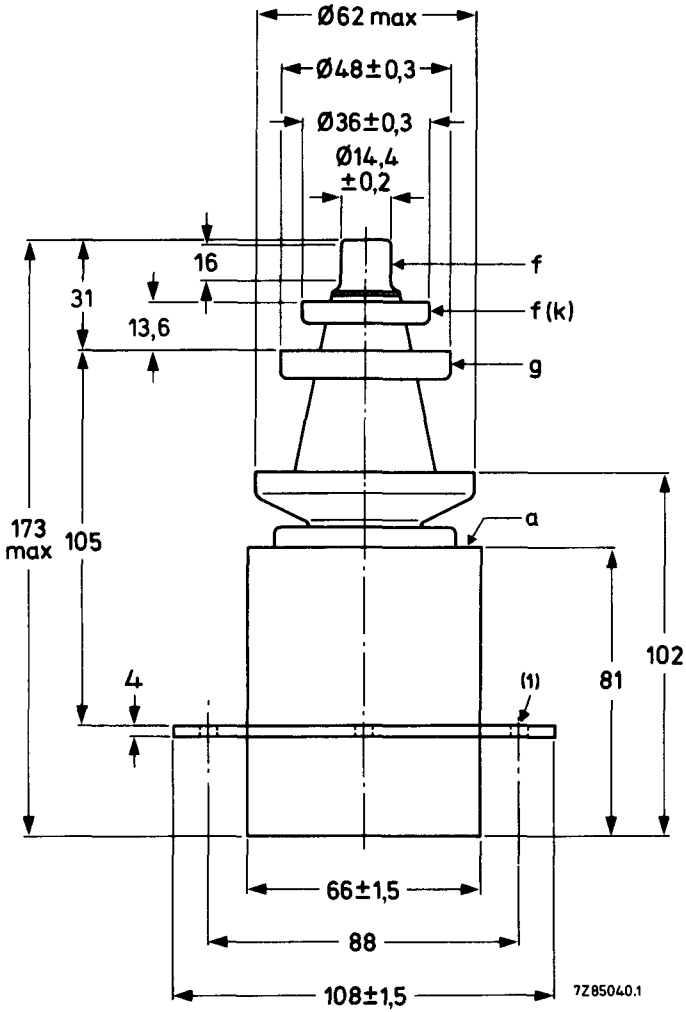

Fig. 2 Mechanical outline – YD1244.

(1) 4 x 5 mm ϕ holes.

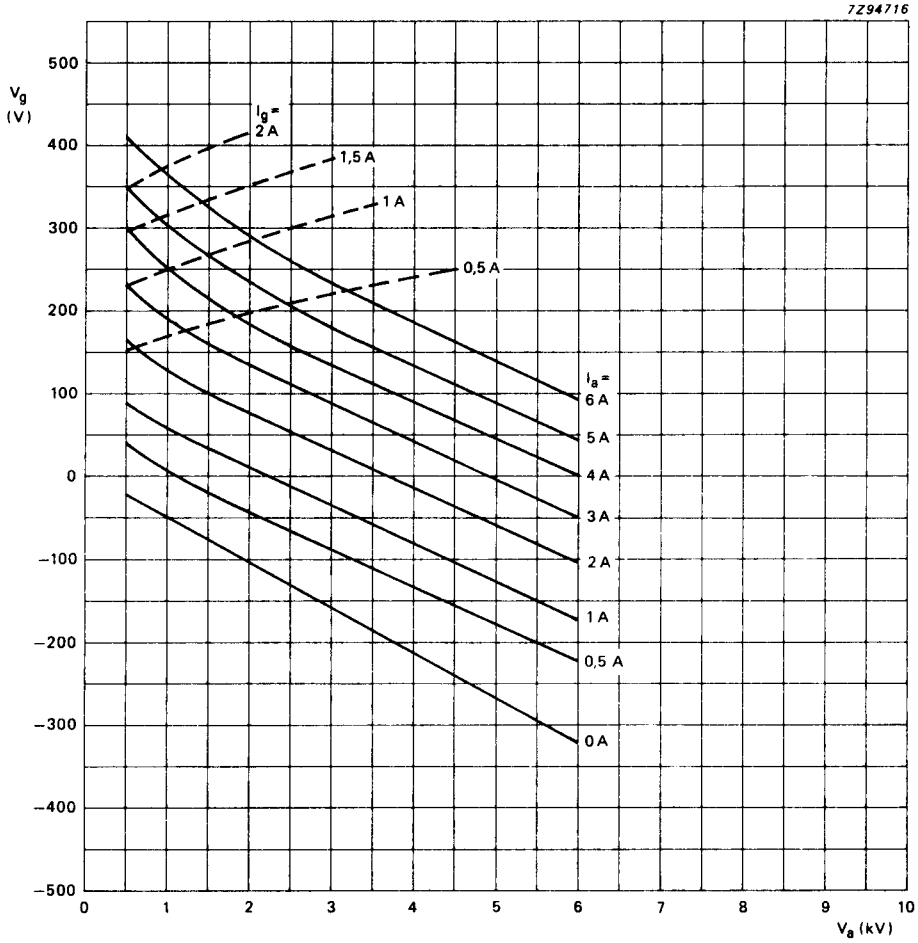

Fig. 3 Constant current characteristics.

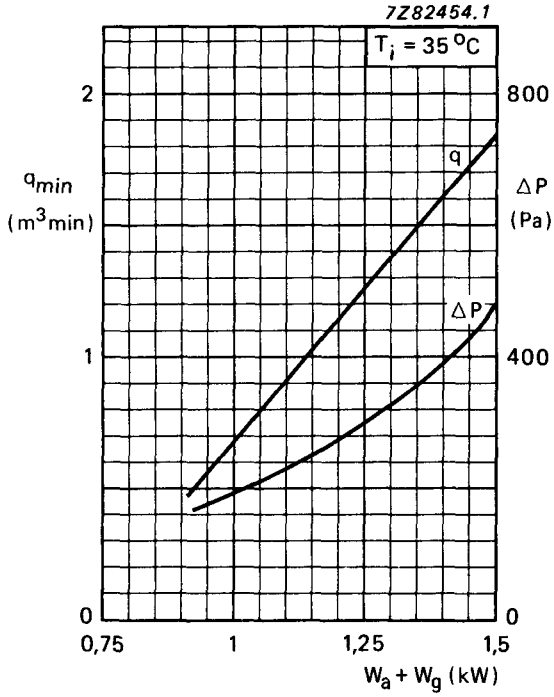

Fig. 4 Cooling curves.

PHILIPS

Data handbook

Electronic components and materials

YD1240 YD1244

page	sheet	date
1	281	1988.02
2	282	1988.02
3	283	1988.02
4	284	1988.02
5	285	1988.02
6	286	1988.02
7	FP	2000.09.09