RF POWER TRIODE

Triodes in metal-ceramic construction intended for use as industrial oscillators.
The YD1195 is forced-air cooled.
The YD1197 has an integral water cooler.

QUICK REFERENCE DATA					
Oscillator output power (W_o-W_{feedb}), typical	YD1195	W_{osc}		90	kW
	YD1197	W_{osc}		107,6	kW
Frequency for full ratings		f	max.	30	MHz

RF CLASS C OSCILLATOR FOR INDUSTRIAL USE

OPERATING CONDITIONS		YD1195/YD1197			YD1197	
Frequency	f	30	30	30	30	MHz
Oscillator output power (W_o-W_{feedb})	W_{osc}	60,6	74	90	107,6	kW
Anode voltage	V_a	8,5	10	12	12	kV
Anode current	I_a	10	10	9,75	12	A
Anode input power	W_{ia}	85	100	117	144	kW
Anode dissipation	W_a	22,4	24	24,9	34	kW
Anode output power	W_o	62,6	76	92,1	110	kW
Anode efficiency	η_a	73,6	76	78,8	76,4	%
Oscillator efficiency	η_{osc}	71,2	74	77	74,7	%
Feedback ratio	V_{gp}/V_{ap}	12,5	10,9	9,4	11	%
Grid resistor	R_g	210	240	260	230	Ω
Grid current, on load	I_g	2,4	2,3	2,3	2,6	A
Grid voltage, negative	$-V_g$	500	550	600	600	V
Grid dissipation	W_g	760	730	720	840	W
Grid resistor dissipation	W_{Rg}	1,2	1,27	1,38	1,56	kW

LIMITING VALUES (Absolute max. ratings system)

Frequency		f	up to	100	MHz[1])
Anode voltage		V_a	max.	14,4	kV
Anode current		I_a	max.	15	A
Anode input power	YD1195	W_{ia}	max.	144	kW
	YD1197	W_{ia}	max.	150	kW
Anode dissipation, continuous service	YD1195	W_a	max.	30	kW
intermittent service	YD1195 *				
Anode dissipation	YD1197	W_a	max.	50	kW
Grid voltage		$-V_g$	max.	1,5	kV
Grid current, on load		I_g	max.	2,8	A
off load		I_g	max.	3,8	A
Grid dissipation		W_g	max.	1	kW
Grid circuit resistance		R_g	max.	10	kΩ
Cathode current, mean		I_k	max.	17,5	A
peak		I_{kp}	max.	70	A
Envelope temperature		T_{env}	max.	240	°C

HEATING : direct: thoriated tungsten filament, mesh construction

Filament voltage	V_f		8,4	V
Filament current	I_f		235	A
Peak filament starting current	I_{fp}	max.	1500	A
Cold filament resistance	R_{fo}		3,9	mΩ

The filament is designed to accept temporary fluctuations of +5% and −10%.

* See Fig. 4.

1) When the tubes are to be used at frequencies above 30 MHz the manufacturer should be consulted for more detailed information.

To ensure that the cathode temperature remains constant irrespective of the operating frequency it may be necessary to reduce the filament voltage at higher frequencies. When doing so it must be borne in mind that the filament voltage-to-current ratio measured with only the filament voltage applied should remain constant under all operating conditions.

It is extremely important that the filament be properly decoupled. This should be done so that the resonance of the circuit formed by the filament and the decoupling elements remain below the fundamental oscillator frequency. In grounded-grid circuits this resonance should be below the grid-cathode resonance. For further information please see Application Book "Tubes for RF heating" or contact the manufacturer.

CAPACITANCES

Anode to filament	C_{af}	1,2	pF
Grid to filament	C_{gf}	100	pF
Anode to grid	C_{ag}	33	pF

CHARACTERISTICS measured at V_a = 12 kV, I_a = 3 A

Transconductance	S	80	mA/V
Amplification factor	μ	50	

COOLING

Table 1 Air cooling characteristics

YD1195

Anode + grid dissipation $W_a + W_g$ kW	Altitude h m	Inlet temperature T_i °C	Rate of flow q_{min} m³/min	Pressure drop ΔP Pa*	Outlet temperature T_o °C
30	0	35	34	1200	84
25	0	35	27,2	780	87
20	0	35	21,4	480	89
30	0	45	38	1500	91
25	0	45	30,4	980	93
20	0	45	23,9	600	95
30	1500	35	41	1380	84
25	1500	35	32,7	900	87
20	1500	35	25,7	550	89
30	3000	25	43	1350	79
25	3000	25	34,4	880	83
20	3000	25	27	540	85

* 1 Pa ≈ 0,1 mm H_2O.

The above cooling conditions apply to the air flow direction as indicated in the outline drawing. In case of reversed flow direction a larger air volume will be required to keep the anode temperature below the limiting value.

To obtain optimum life, the temperature of the seals and the envelope should, under normal operating conditions, be kept below 200 °C.

YD1197

Table 2 Water cooling characteristics

Anode + grid dissipation $W_a + W_g$ kW	Inlet temperature t_i °C	Rate of flow qmin ℓ/min	Pressure drop p_i kPa	Outlet temperature t_i °C
50	20	26	60	49
	50	39	123	69
40	20	20	40	51
	50	30	80	71
30	20	14	24	53
	50	21	43	72
20	20	9	10	56
	50	13,5	20	74

Absolute max. water inlet temperature	T_i	max.	50	°C
Absolute max. water pressure	p	max.	600	kPa(abs)

To obtain optimum life, the temperature of the seals and the envelope should, under continuously loaded conditions, be kept belwo 200 °C.

At low frequencies the seals are sufficiently cooled when the filament connectors are water cooled with a flow of about 0,5 ℓ/min. At higher frequencies, however, an additional air flow of about 1 m^3/min must be led along the seals from a 30 mm diameter nozzle positioned at a distance of 200 mm from the tube header.

ACCESSORIES

Filament connector with cable	type	40705A
Filament/cathode connector with cable	type	40706A
Grid connector, f > 4 MHz	type	40736
f ≤ 4 MHz	type	40707
Insulating pedestal (YD1195 only)	type	40729

*100 kPa ≈ 1 at.

YD1195

MECHANICAL DATA Dimensions in mm

Mounting position : vertical with anode up or down

Net mass : approx. 20 kg

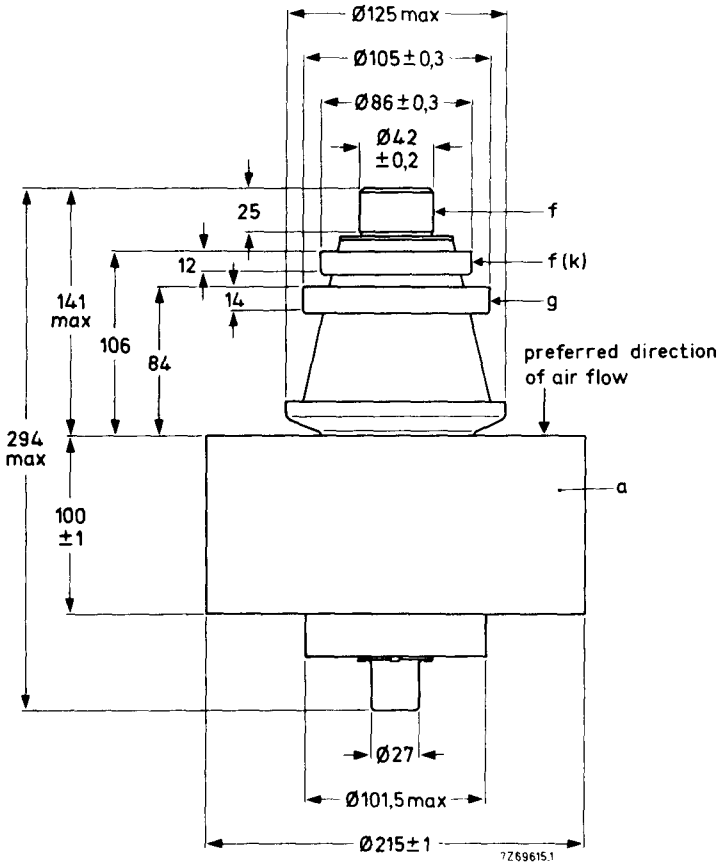

Fig. 1 Mechanical outline – YD1195.

YD1197

MECHANICAL DATA Dimensions in mm

Mounting position : vertical with anode up or down

Net mass : approx. 6,5 kg

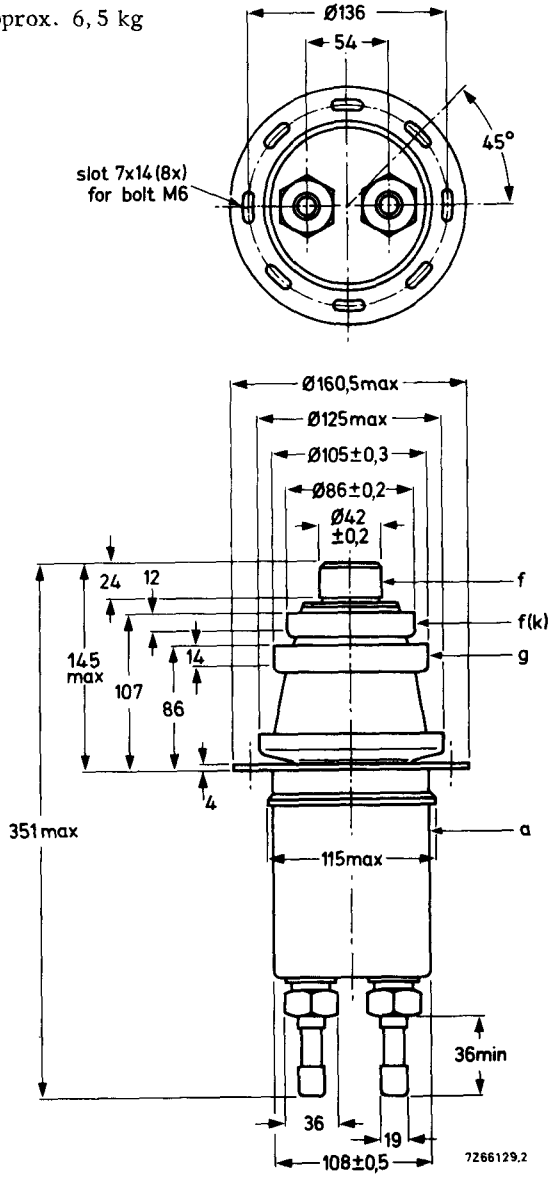

Thread of water connections BSP 1 in.

Fig. 2 Mechanical outline – YD1197.

With the anode up the water connections should be interchanged.

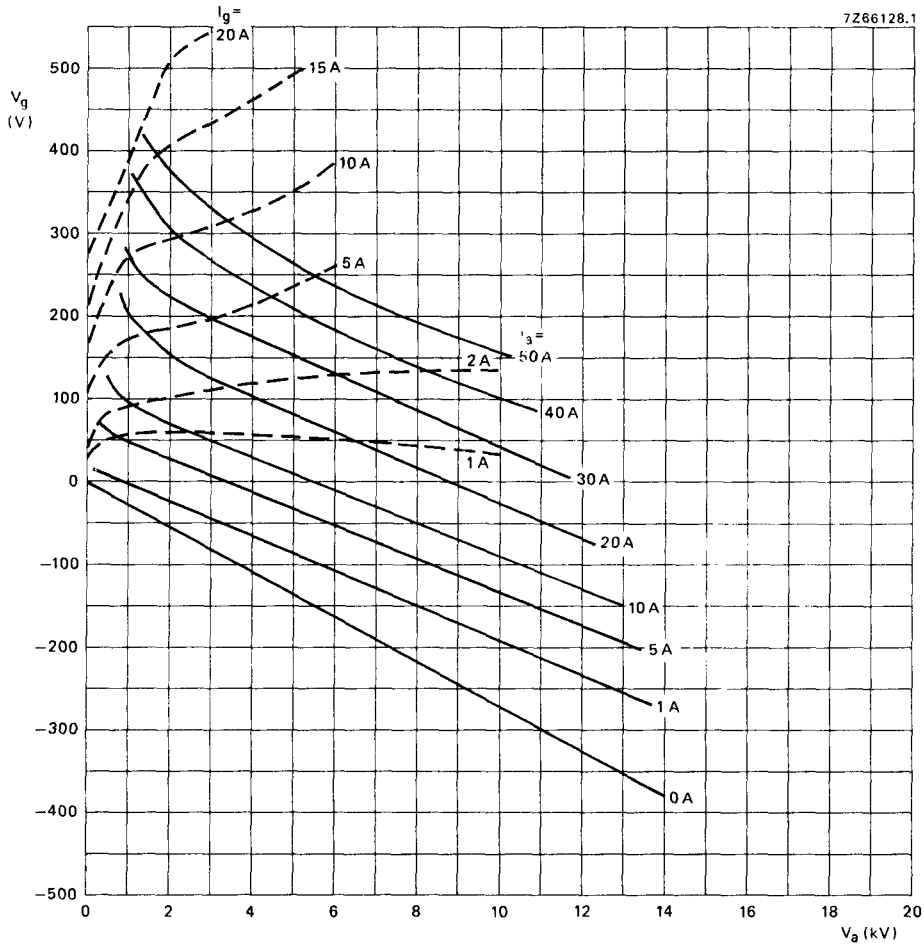

Fig. 3 Constant current characteristics.

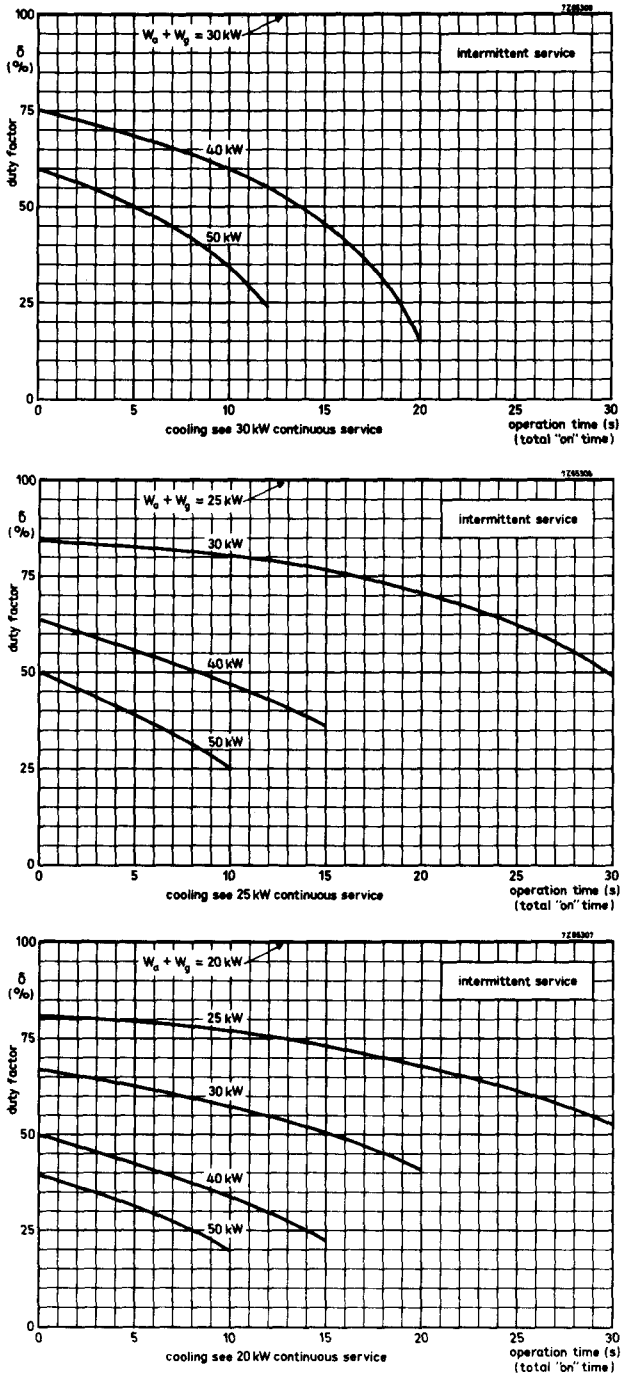

Fig. 4 Intermittent service. Limits of anode dissipation and cooling.

PHILIPS

Data handbook

Electronic components and materials

YD1195 YD1197

page	sheet	date
1	261	1988.02
2	262	1988.02
3	263	1988.02
4	264	1988.02
5	265	1988.02
6	266	1988.02
7	267	1988.02
8	268	1988.02
9	FP	2000.09.09