RF POWER TRIODE

Triodes in metal-ceramic construction intended for use as industrial oscillators.
The YD1185 is forced-air cooled
The YD1187 is water cooled by an integral cooler.

QUICK REFERENCE DATA				
Oscillator output power (W_o-W_{feedb}), typical	W_{osc}		50	kW
Fequency for full ratings	f	max.	100	MHz

To be read in conjunction with "General Operational Recommendations".

RF CLASS C OSCILLATOR FOR INDUSTRIAL USE

OPERATING CONDITIONS

Frequency	f	90	90	90	MHz
Oscillator output power (W_o-W_{feedb})	W_{osc}	33,4	40	50	kW
Anode voltage	V_a	8,5	10	12	kV
Anode current	I_a	5,4	5,33	5,33	A
Anode input power	W_{ia}	45,9	53,3	64	kW
Anode dissipation	W_a	11,4	12,1	12,8	kW
Anode output power	W_o	34,5	41,2	51,2	kW
Anode efficiency	η_a	75,1	77,3	80,0	%
Oscillator efficiency	η_{osc}	72,7	75,0	78,1	%
Feedback ratio	V_{gp}/V_{ap}	11	10,2	9	%
Grid resistor	R_g	330	400	430	Ω
Grid current, on load	I_g	1,5	1,45	1,4	A
Grid voltage, negative	$-V_g$	495	580	600	V
Grid dissipation	W_g	400	380	360	W
Grid resistor dissipation	W_{R_g}	740	840	840	W

LIMITING VALUES (Absolute max. rating system)

Frequency for full ratings	f	up to	100	MHz
Anode voltage	V_a	max.	14,4	kV
Anode current	I_a	max.	6	A
Anode input power	W_{ia}	max.	72	kW
Anode dissipation, continuous service (YD1185)*	W_a	max.	15	kW
(YD1187)	W_a	max.	20	kW
Grid voltage	$-V_g$	max.	1,5	kV
Grid current, on load	I_g	max.	1,6	A
off load	I_g	max.	2,4	A
Grid dissipation	W_g	max.	500	W
Grid circuit resistance	R_g	max.	10	kΩ
Cathode current, mean	I_k	max.	7,5	A
peak	I_{kp}	max.	40	A
Envelope temperature	T_{env}	max.	240	°C

HEATING : direct; thoriated tungsten filament, mesh construction

Filament voltage	V_f		7	V
Filament current	I_f		175	A
Peak filament staring current	I_{fp}	max.	1000	A
Cold filament resistance	R_{fo}		4,2	mΩ

The filament is designed to accept temporary fluctuations of +5% and -10%.

To ensure that the cathode temperature remains constant irrespective of the operating frequency, it may be necessary to reduce the filament voltage at higher frequencies. When doing so it must be borne in mind that the filament voltage-to-current ratio measured with only the filament voltage applied should remain constant under all operating conditions

It is extremely important that the filament be properly decoupled. This should be done so that the resonance of the circuit formed by the filament and decoupling elements remain below the fundamental oscillator frequency. In grounded-grid circuits this resonance should be below the grid-cathode resonance. For further information please see Application Book "Tubes for RF heating" or consult the manufacturer.

CAPACITANCES

Anode to filament	C_{af}	0,8	pF
Grid to filament	C_{gf}	66	pF
Anode to grid	C_{ag}	22	pF

* See Fig. 4.

CHARACTERISTICS measured at V_a = 11 kV, I_a = 1,5 A

Transconductance	S	40	mA/V
Amplification factor	μ	50	

COOLING

To obtain optimum life, the temperature of the seals and of the envelope should, under normal operating conditions, be kept below 200 °C.

To maintain these temperatures additional cooling may be necessary.
At frequencies higher than about 4 MHz cooling of the seals becomes mandatory.

YD1185

Table 1 Air cooling characteristics

With insulating pedestal type 40648

Anode + grid dissipation $W_a + W_g$ (kW)	Altitude h (m)	Inlet temperature T_i (°C)	Rate of flow q_{min} (m^3/min)	Pressure drop ΔP (Pa *)	Outlet temperature T_o (°C)
15	0	35	15	850	92
10	0	35	9,3	350	99
8	0	35	7	220	104
15	0	45	17,3	1060	98
10	0	45	10,7	440	104
8	0	45	8,1	270	108
15	1500	35	18	970	93
10	1500	35	11,2	400	100
8	1500	35	8,4	250	104
15	3000	25	19	950	90
10	3000	25	11,8	390	95
8	3000	25	8,9	250	99

* 1 Pa ≈ 0,1 mm H_2O

YD1187

Table 2 Water cooling characteristics

Anode + grid dissipation $W_a + W_g$ (kW)	Inlet temperature T_i (°C)	Rate of flow q_{min} (ℓ/min)	Pressure drop ΔP (kPa*)	Outlet temperature T_o (°C)
20	20	10	40	51
	50	15	80	71
15	20	7	22	54
	50	10,5	43	73
10	20	4,5	10	58
	50	6,7	20	75

Absolute max. water inlet temperature	T_i	50	°C
Absolute max. water pressure	P	600	kPa* (abs)

ACCESSORIES

Filament connector with cable	type	40708A	net mass	600	g
Filament/cathode connector with cable	type	40709A	net mass	640	g
Grid connector ⩽ 4 MHz	type	40710	net mass	60	g
Grid connector > 4 MHz	type	40711	net mass	310	g
Insulating pedestal (YD1185 only)	type	40648	net mass	7,15	kg

* 100 kPa ≈ 1 at.

MECHANICAL DATA

YD1185

Mounting position: vertical with anode up or down

Net mass: approx. 12 kg

Dimensions in mm

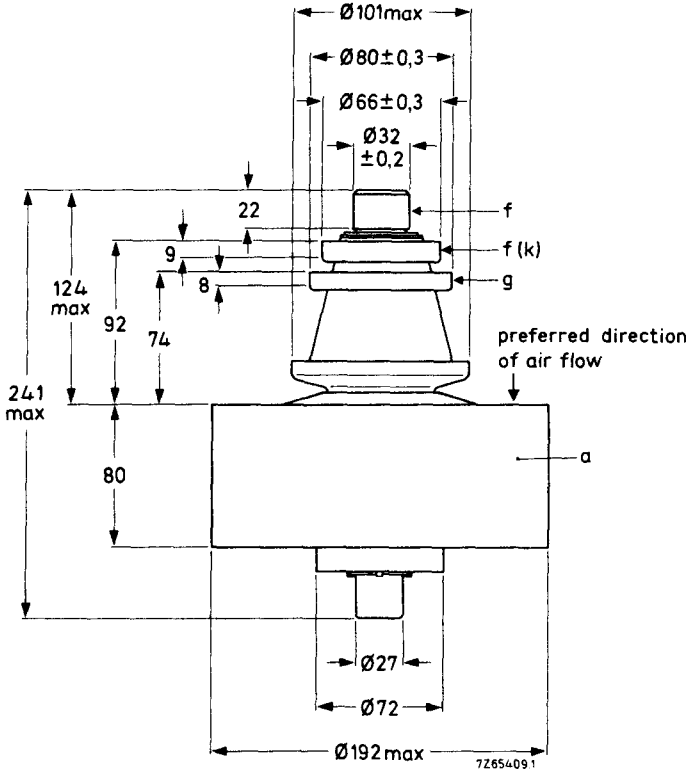

Fig. 1 Mechanical outline – YD1185.

YD1187

Mounting position : vertical, with anode up or down

Net mass : approx. 3,4 kg

Dimensions in mm

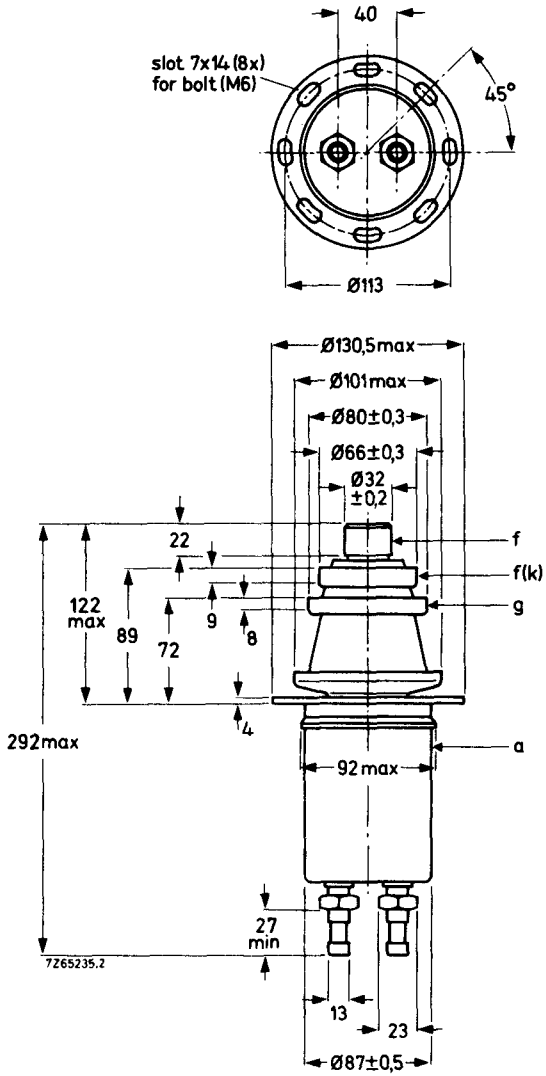

Fig. 2 Mechanical outline – YD1187.

Thread of water connections BSP 1/2 in

With the anode up the inlet and outlet connections should be interchanged.

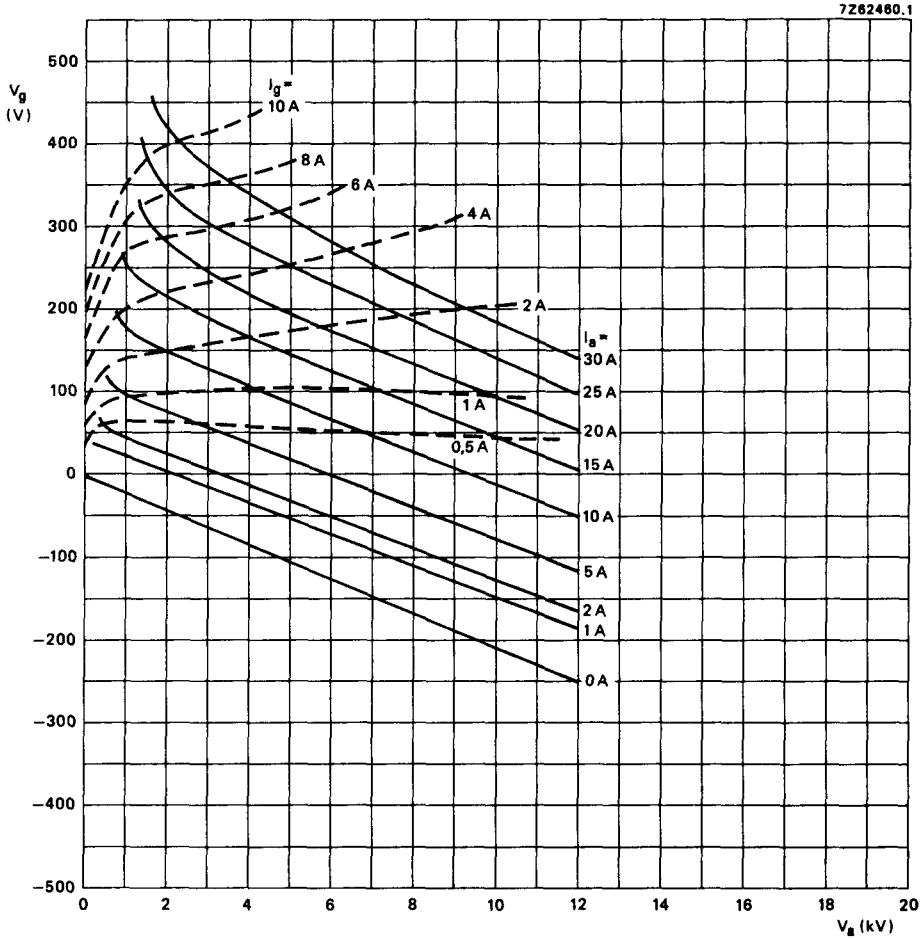

Fig. 3 Constant current characteristics.

YD1185

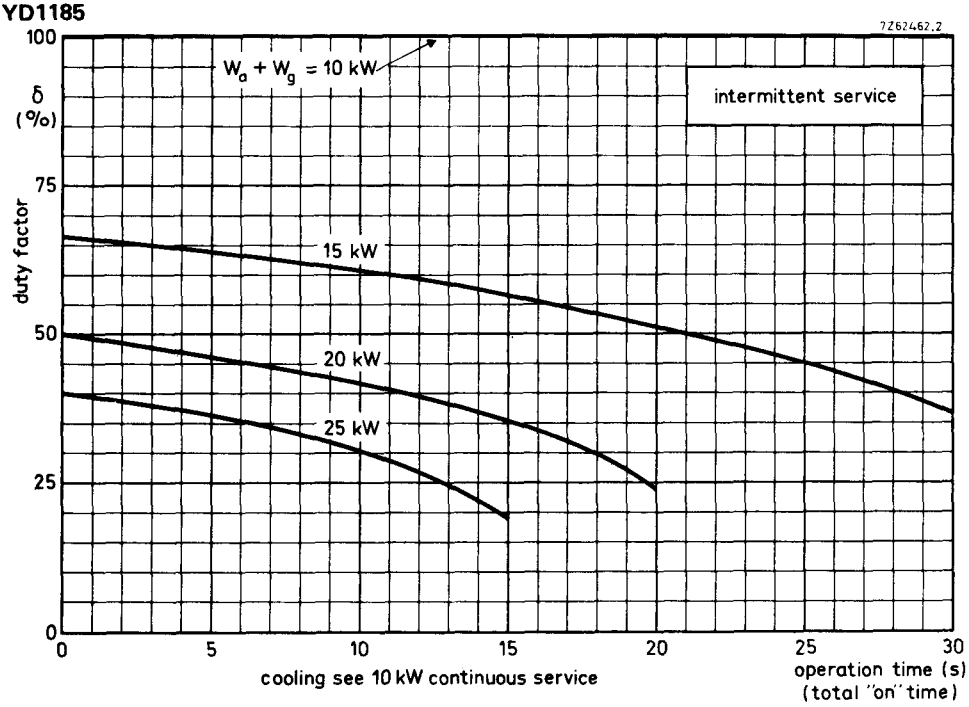

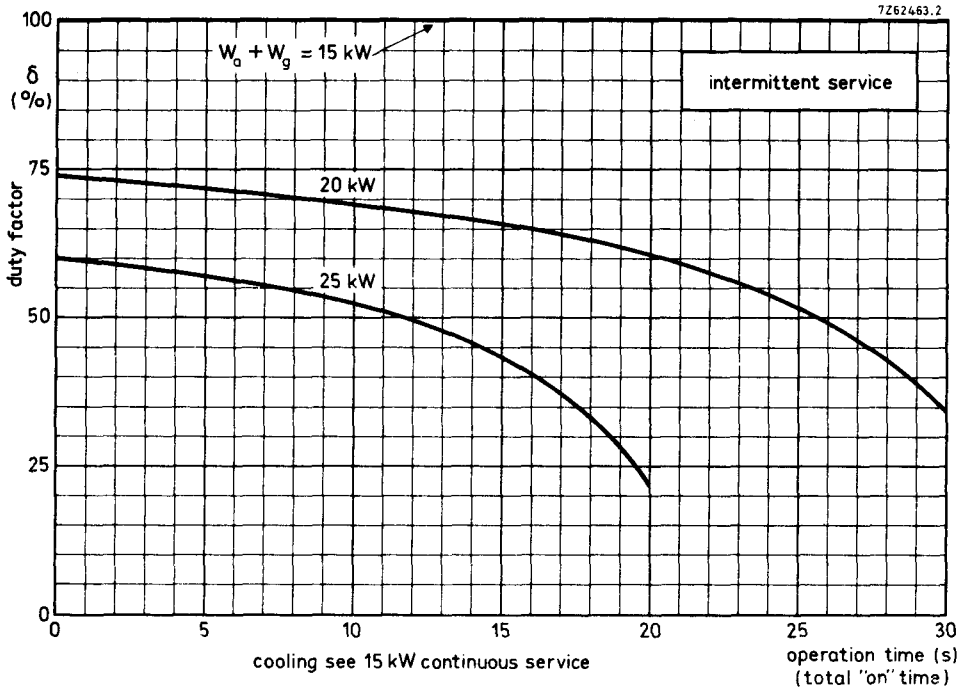

Fig. 4 (YD1185 only). Intermittent service. Limits of anode dissipation and cooling.

PHILIPS

Data handbook

Electronic components and materials

YD1185 YD1187

page	sheet	date
1	239	1988.02
2	240	1988.02
3	241	1988.02
4	242	1988.02
5	243	1988.02
6	244	1988.02
7	245	1984.11
8	246	1988.02
9	FP	2000.09.09