RF POWER TRIODE

Forced air cooled triode of metal-ceramic construction with integral cooler intended for use as an industrial oscillator.

QUICK REFERENCE DATA				
Oscillator output power (W_o-W_{feedb}), typical	W_{osc}		13.22	kW
Frequency fur full ratings	f	max.	50	MHz

To be read in conjunction with "General Operational Recommendations".

RF CLASS C OSCILLATOR FOR INDUSTRIAL USE

OPERATING CONDITIONS

Frequency	f	50	MHz
Oscillator output power (W_o-W_{feedb})	W_{osc}	13.22	kW
Anode voltage	V_a	10.0	kV
Anode current	I_a	1.75	A
Anode input power	W_{ia}	17.5	kW
Anode dissipation	W_a	3.8	kW
Anode output power	W_o	13.7	kW
Anode efficiency	η_a	78.3	%
Oscillator efficiency	η_{osc}	75.6	%
Feedback ratio	V_{gp}/V_{ap}	12.0	%
Grid resistor	R_g	1.5	kΩ
Grid current, on load	I_g	450	mA
Grid voltage, negative	$-V_g$	675	V
Grid dissipation	W_g	180	W
Grid resistor dissipation	W_{Rg}	304	W

LIMITING VALUES (Absolute max. rating system)

Frequency for full ratings	f	up to	50	MHz
Anode voltage	V_a	max.	12	kV
Anode current	I_a	max.	2.0	A
Anode input power	W_{ia}	max.	20	kW
Anode dissipation	W_a	max.	10	kW
Grid voltage	$-V_g$	max.	1.5	kV
Grid current, on load	I_g	max.	0.6	A
off load	I_g	max.	0.8	A
Grid dissipation	W_g	max.	300	W
Grid circuit resistance	R_g	max.	10	kΩ
Cathode current, mean	I_k	max.	2.5	A
peak	I_{kp}	max.	10	A
Envelope temperature	T_{env}	max.	240	°C

HEATING : direct; filament thoriated tungsten

Filament voltage	V_f		5.4	V
Filament current	I_f		65	A
Peak filament starting current	I_{fp}	max.	400	A
Cold filament resistance	R_{fo}		10	mΩ

The filament is designed to accept temporary fluctuations of +5% and −10%.

It is extremely important that the filament be properly decoupled. This should be done so that the resonance of the circuit formed by the filament and the decoupling elements remain below the fundamental oscillator frequency. In grounded-grid circuits this resonance should be below the grid-cathode resonance. For further information please see Application Book "Tubes for RF heating" or contact the manufacturer.

CAPACITANCES

Anode to filament	C_{af}	0.4	pF
Grid to filament	C_{gf}	42	pF
Anode to grid	C_{ag}	17	pF

CHARACTERISTICS measured at V_a = 10 kV, I_a = 1 A

Transconductance	S	22	mA/V
Amplification factor	μ	45	

COOLING

Table 1 Air cooling characteristics

With insulating pedestal type 40654.

Anode + grid dissipation $W_a + W_g$ (kW)	Altitude h (m)	Inlet temperature T_i (°C)	Rate of flow qmin (m^3/min)	Pressure drop ΔP (Pa)*	Outlet temperature T_o (°C)
10	0	35	9,5	550	94
8	0	35	6,5	280	105
6	0	35	4,5	150	113
4	0	35	3,0	80	117
10	0	45	11	690	98
8	0	45	7,6	350	108
6	0	45	5,2	190	115
4	0	45	3,5	100	119
10	1500	35	11,4	630	94
8	1500	35	7,8	320	105
6	1500	35	5,5	170	113
4	1500	35	3,6	90	117
10	3000	25	12	620	90
8	3000	25	8,2	320	102
6	3000	25	5,7	170	111
4	3000	25	3,8	90	116

To obtain optimum life, the temperatures of the seals and of the envelope should, under normal operating conditions, be kept below 200 °C.

ACCESSORIES

Filament connector with cable	type	40692A	net mass	450	g
Filament/cathode connector with cable	type	40693A	net mass	490	g
Grid connector f ≤ 4 MHz	type	40690	net mass	55	g
f > 4 MHz	type	40691	net mass	240	g
Insulating pedestal	type	40654	net mass	4,25	kg

* 1 Pa ≈ 0,1 mm H_2O.

MECHANICAL DATA

Mounting position : vertical with anode up or down

Net mass : approx. 7 kg

Dimensions in mm

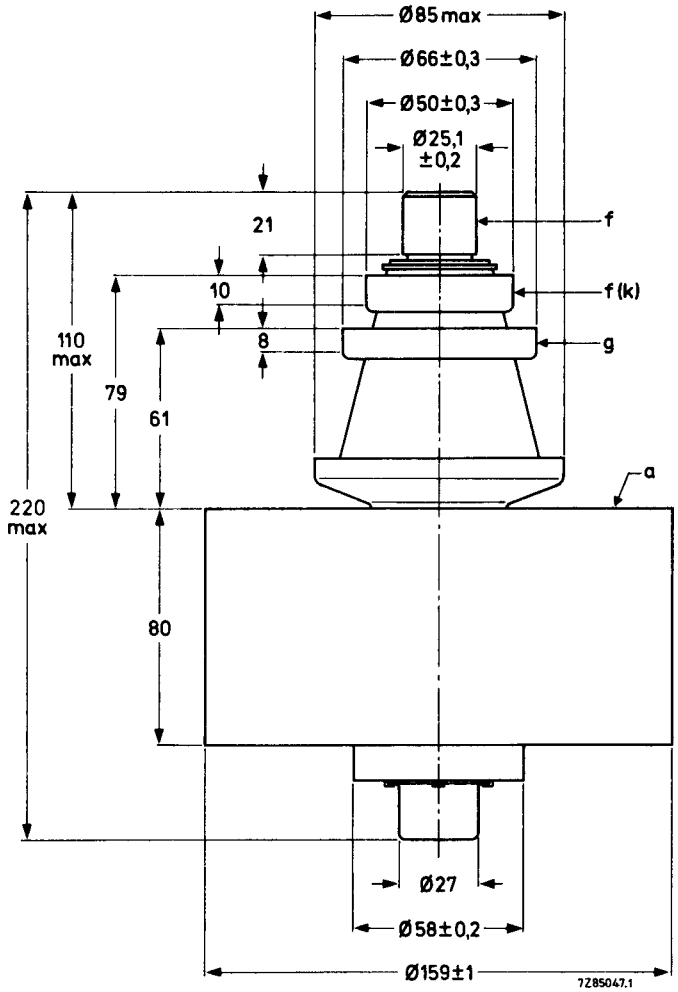

Fig. 1 Mechanical outline.

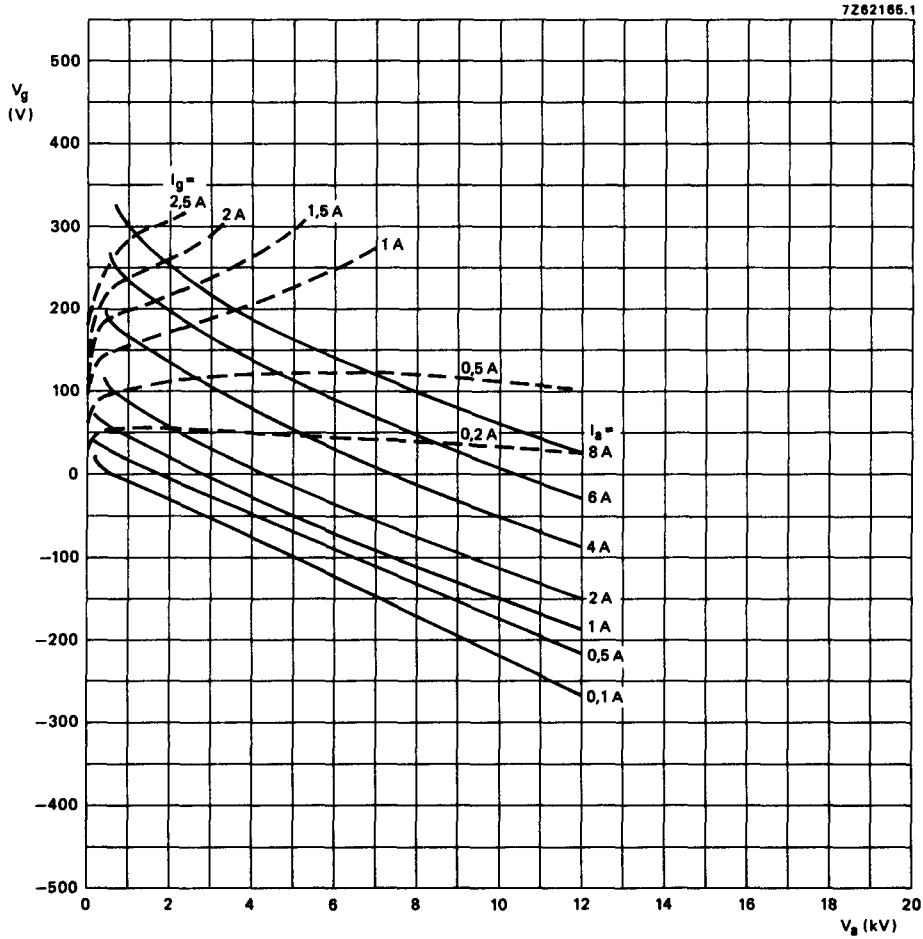

Fig. 2 Constant current characteristics.

PHILIPS

Data handbook

Electronic components and materials

YD1173

page	sheet	date
1	209	1988.02
2	210	1988.02
3	211	1988.02
4	212	1988.02
5	213	1988.02
6	FP	2000.08.27