RF POWER TRIODE

Triodes in metal-ceramic construction intended for use as industrial oscillators. The YD1170 is forced-air cooled. The YD1172 has an integral helical water cooler.

QUICK REFERENCE DATA

Oscillator output power ($W_o - W_{feedback}$), typical	W_{osc}		15,4	kW
Frequency for full ratings	f	max.	120	MHz

To be read in conjunction with "General Operational Recommendations Transmitting Tubes for Communication; Tubes for R.F. Heating".

RF CLASS C OSCILLATOR FOR INDUSTRIAL USE

OPERATING CONDITIONS

Frequency	f	120	MHz
Filament voltage	V_f	5,8	V
Oscillator output power ($W_o - W_{feedback}$)	W_{osc}	15,4	kW
Anode voltage	V_a	6	kV
Anode current	I_a	3,4	A
Anode input power	W_{ia}	20,4	kW
Anode dissipation	W_a	4,3	kW
Anode output power	W_o	16,1	kW
Anode efficiency	η_a	78,9	%
Oscillator efficiency	η_{osc}	75,5	%
Feedback ratio	V_{gp}/V_{ap}	15,5	%
Grid resistor	R_g	500	Ω
Grid current, on load	I_g	920	mA
Grid voltage, negative	$-V_g$	460	V
Grid dissipation	W_g	280	W
Grid resistor dissipation	W_{Rg}	423	W

LIMITING VALUES (Absolute maximum rating system)

Frequency for full ratings	f	up to	120	MHz
Anode voltage	V_a	max.	7,2	kV
Anode current	I_a	max.	4	A
Anode input power	W_{ia}	max.	24	kW
Anode dissipation	W_a	max.	10	kW
Grid voltage	$-V_g$	max.	1,5	kV
Grid current				
on load	I_g	max.	1	A
off load	I_g	max.	1,5	A
Grid dissipation	W_g	max.	350	W
Grid circuit resistance	R_g	max.	10	kΩ
Cathode current				
mean	I_k	max.	5	A
peak	I_{kp}	max.	25	A
Envelope temperature	T_{env}	max.	240	°C

HEATING: direct; thoriated tungsten filament

Filament voltage	V_f		5,8	V
Filament current	I_f		130	A
Peak filament starting current	I_{fp}	max.	800	A
Cold filament resistance	R_{fo}		5,6	mΩ

The filament is designed to accept temporary fluctuations of + 5% and −10%.

To ensure that the cathode temperature remains constant irrespective of the operating frequency, it may be necessary to reduce the filament voltage at higher frequencies. When doing so it must be borne in mind that the filament voltage-to-current ratio measured with only the filament voltage applied should remain constant under all operating conditions.

It is extremely important that the filament be properly decoupled. This should be done so that the resonance of the circuit formed by the filament and the decoupling elements remain below the fundamental oscillator frequency. In grounded-grid circuits this resonance should be below the grid-cathode resonance. For further information please see Application Book "Tubes for RF heating" or contact the manufacturer.

CAPACITANCES

Anode to filament	C_{af}	0,8	pF
Grid to filament	C_{gf}	47	pF
Anode to grid	C_{ag}	25	pF

CHARACTERISTICS measured at V_a = 6 kV, I_a = 2 A

Transconductance	S	40	mA/V
Amplification factor	μ	30	

COOLING

To obtain optimum life, the temperature of the seals and of the envelope should, under normal operating conditions, be kept below 200 °C.

To maintain these temperatures additional cooling may be necessary. At frequencies higher than about 4 MHz cooling of the seals becomes mandatory.

YD1170

Table 1 Air cooling characteristics

anode + grid dissipation $W_a + W_g$ kW	altitude h m	inlet temperature T_i °C	rate of flow q_{min} m^3/min	pressure drop ΔP P_a*	outlet temperature T_o °C
10	0	35	9,5	550	94
8	0	35	6,5	280	105
6	0	35	4,5	150	113
4	0	35	3,0	80	117
10	0	45	11,0	690	98
8	0	45	7,6	350	108
6	0	45	5,2	190	115
4	0	45	3,5	100	119
10	1500	35	11,4	630	94
8	1500	35	7,8	320	105
6	1500	35	5,5	170	113
4	1500	35	3,6	90	117
10	3000	25	12,0	620	90
8	3000	25	8,2	320	102
6	3000	25	5,7	170	111
4	3000	25	3,8	90	116

Absolute max. air inlet temperature	T_i	max. 45	°C
Direction of air flow		arbitrary	

* 1 Pa ≈ 0,1 mm H_2O.

YD1172

Table 2 Water cooling characteristics

anode + grid dissipation $W_a + W_g$ kW	inlet temperature T_i °C	rate of flow q_{min} ℓ/min	pressure drop ΔP kPa*	outlet temperature T_o °C
10	20	6,0	25	46
	50	9,0	52	67
8	20	4,5	15	49
	50	6,7	31	69
6	20	3,0	7	53
	50	4,5	15	72

Absolute max. water inlet temperature	T_i	max.	50 °C
Absolute max. water pressure	P	max.	600 kPa

ACCESSORIES

Filament connector with cable	40692A
Filament/cathode connector with cable	40693A
Grid connector f ⩽ 4 MHz	40690
f > 4 MHz	40691
Insulating pedestal (YD1170 only)	40654

* 100 kPa ≈ 1 at

MECHANICAL DATA

YD1170

Mounting position: vertical with anode up or down

Net mass approx. 7 kg

Dimensions in mm

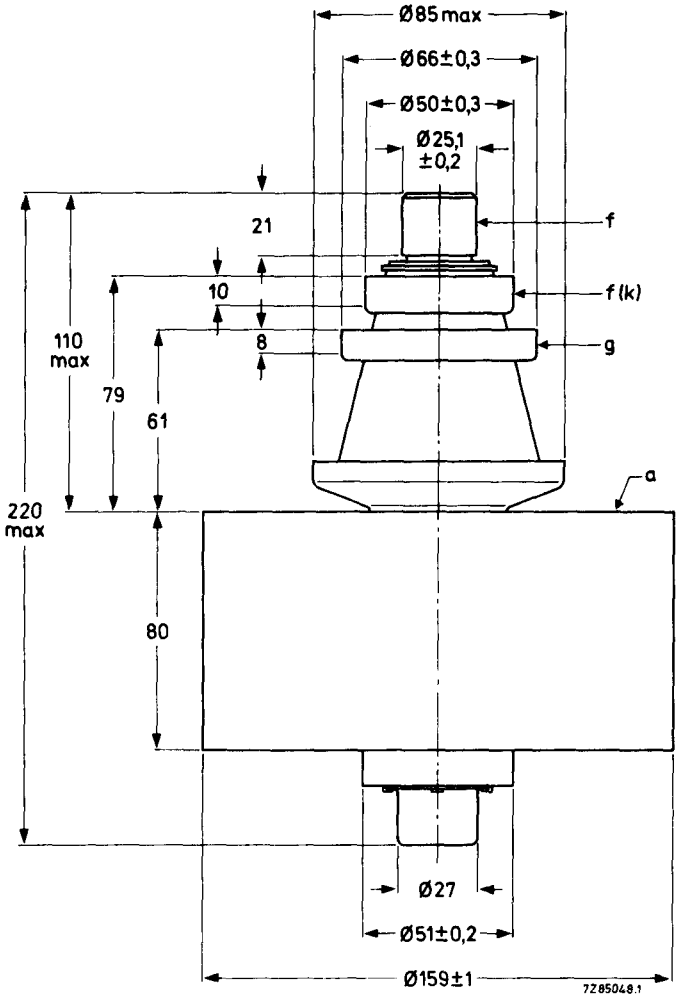

Fig. 1 Mechanical outline – YD1170.

YD1172

Mounting position: vertical with anode up or down

Net mass: approx. 1,85 kg

Dimensions in mm

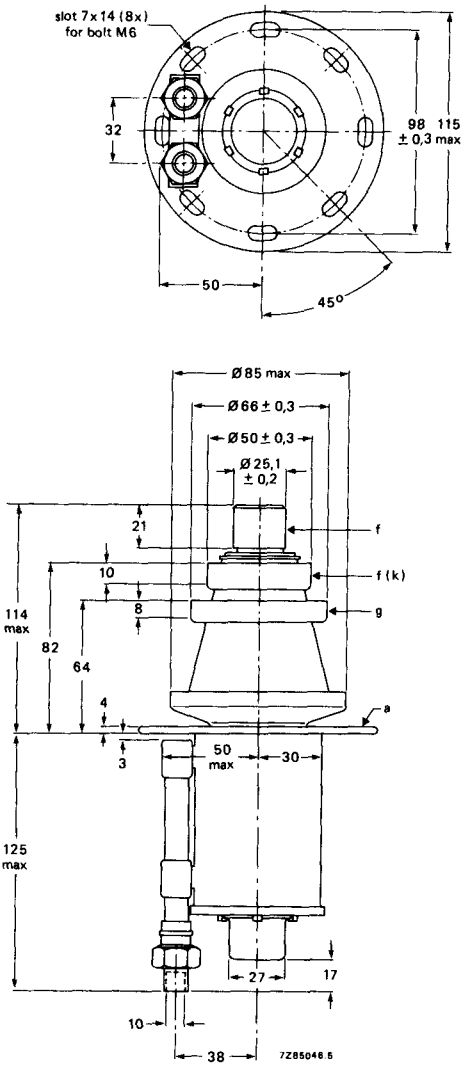

Fig. 2 Mechanical outline – YD1172.

Preferred water inlet
the lowest connections

Thread of water connections BSP 3/8 in

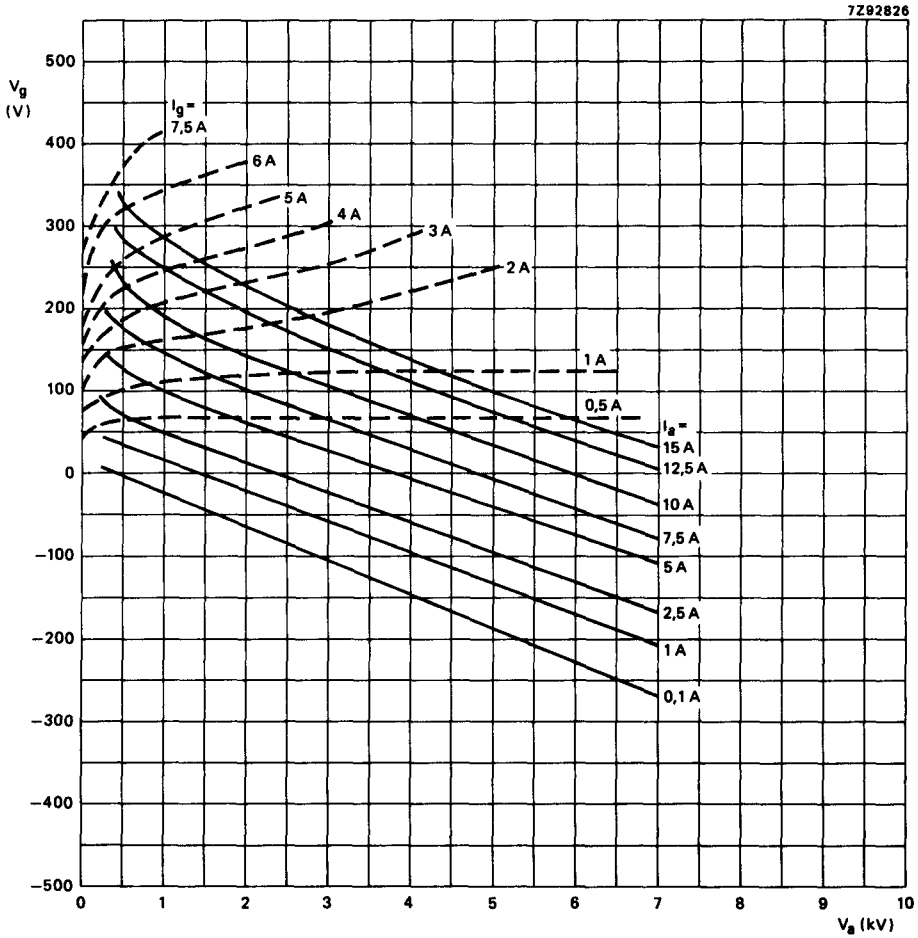

Fig. 3 Constant current characteristics.

PHILIPS

Data handbook

Electronic components and materials

YD1170 YD1172

page	sheet	date
1	201	1988.02
2	202	1988.02
3	203	1988.02
4	204	1988.02
5	205	1988.02
6	206	1988.02
7	207	1988.02
8	FP	2000.08.27