AIR COOLED R.F. POWER TRIODE

QUICK REFERENCE DATA								
Frequency (MHz)	C telegraphy		C anode mod.		C television Two tubes		AF class B Two tubes	
	V_a (kV)	W_o (kW)	V_a (kV)	W_o (kW)	V_a (kV)	W_o (kW)	V_a (kV)	W_o (kW)
30	4	4.0					6	13.3
	5	5.6						
	6	6.9						
75			5	4.7				
110	5	4.8	4	2.8				
220	3	2.65						
48 to 75					5	9.5		

HEATING: direct; filament thoriated tungsten

Filament voltage	V_f	=	12.6	V
Filament current	I_f	=	33	A

The connection f_c is intended for use as cathode return. It is not an electrical centre tap and must not be used for filament current supply. At frequencies above 30 MHz the three filament leads should be interconnected by suitable capacitors.

CAPACITANCES

Anode to filament	C_{af}	=	0.3	pF
Grid to filament	C_{gf}	=	16	pF
Anode to grid	C_{ag}	=	11	pF

TYPICAL CHARACTERISTICS

Anode voltage	V_a	=	4.0	kV
Anode current	I_a	=	1.0	A
Amplification factor	μ	=	32	
Mutual conductance	S	=	17	mA/V

TEMPERATURE LIMITS (Absolute limits)

Temperature of anode and grid seals	t	=	max.	180	°C
Temperature of pin seals	t	=	max.	220	°C
Air inlet temperature	t_i	=	max.	45	°C

AIR COOLING CHARACTERISTICS

W_a (kW)	h (m)	t_i (°C)	q_{min} (m^3/min)	p_i (mm H_2O)
1	0	35	3.0	8
	0	45	3.1	8
	1500	35	3.7	9
	3000	25	4.1	10
3	0	35	5.2	23
	0	45	6.1	29
	1500	35	6.2	26
	3000	25	6.6	26
5	0	35	9.2	68
	0	45	10.7	90
	1500	35	11.2	81
	3000	25	11.6	79

It may be necessary to direct an air flow to the seals to keep them within the temperature limits.

MECHANICAL DATA

Dimensions in mm

Net weight: 3.4 kg

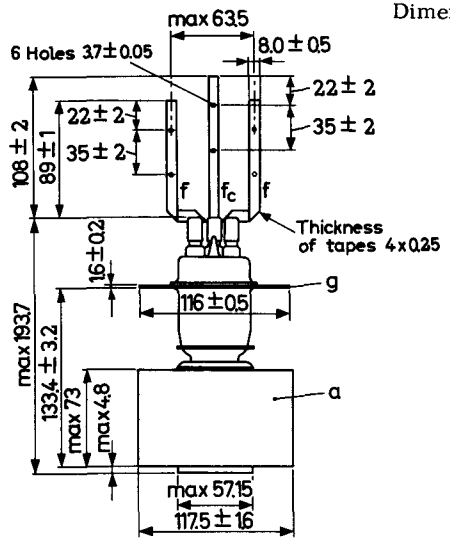

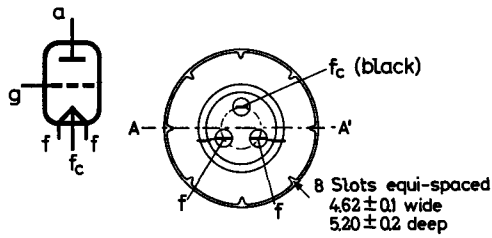

The plane of the filament is parallel to AA' to within $3\frac{1}{2}^{o}$

Mounting position: vertical with base up or down

R.F. CLASS C TELEGRAPHY or F.M. TELEPHONY

LIMITING VALUES (Absolute limits)

Frequency	f		up to	75	110	220	MHz
Anode voltage	V_a	=	max.	6.2	5.5	4.0	kV
Anode current	I_a	=	max.	1.5	1.5	1.5	A
Anode input power	W_{ia}	=	max.	9.3	8.2	6.0	kW
Anode dissipation	W_a	=	max.	5.0	5.0	5.0	kW
Negative grid voltage	$-V_g$	=	max.	1000	1000	1000	V
Grid current	I_g	=	max.	350	350	350	mA

OPERATING CONDITIONS

Frequency	f	=	30	30	30	110	220[1])	MHz
Anode voltage	V_a	=	6.0	5.0	4.0	5.0	3.0	kV
Grid voltage	V_g	=	-400	-300	-200	-300	-160	V
Anode current	I_a	=	1.5	1.5	1.37	1.25	1.25	A
Grid current	I_g	=	310	330	300	300	250	mA
Driver output power	W_{dr}	=	275	240	190	250	510	W
Anode input power	W_{ia}	=	9.0	7.5	5.5	6.25	3.75	kW
Anode dissipation	W_a	=	2.1	1.9	1.5	1.45	1.6	kW
Output power	W_o	=	6.9	5.6	4.0	4.8	2.65	kW
Tube efficiency	η	=	76.5	75	73	77	70	%
Output power in the load	W_ℓ	=	5.5	4.5	3.2	3.9	2.15	kW

[1]) In grounded grid circuit

R.F. CLASS C ANODE MODULATION

LIMITING VALUES (Absolute limits)

Frequency	f		up to	75	110	220	MHz
Anode voltage	V_a	=	max.	5.0	4.5	3.2	kV
Anode current	I_a	=	max.	1.3	1.3	1.3	A
Anode input power	W_{i_a}	=	max.	6.5	5.8	4.0	kW
Anode dissipation	W_a	=	max.	3.4	3.4	3.4	kW
Negative grid voltage	$-V_g$	=	max.	1000	1000	1000	V
Grid current	I_g	=	max.	350	350	350	mA

OPERATING CONDITIONS

Frequency	f	=	75	110	MHz
Anode voltage	V_a	=	5.0	4.0	kV
Grid voltage	V_g	=	-400	-350	V
Anode current	I_a	=	1.2	0.93	A
Grid current	I_g	=	300	240	mA
Driver output power	W_{dr}	=	205	130	W
Anode input power	W_{i_a}	=	6.0	3.72	kW
Anode dissipation	W_a	=	1.3	0.92	kW
Output power	W_o	=	4.7	2.8	kW
Tube efficiency	η	=	78.5	75	%
Output power in the load	W_ℓ	=	3.75	2.25	kW
Modulation depth	m	=	100	100	%
Modulation power	W_{mod}	=	2.4	1.4	kW

R.F. CLASS C AMPLIFIER FOR TELEVISION SERVICE ; negative modulation, positive synchronisation

LIMITING VALUES (Absolute limits)

Frequency	f		up to 75	up to 220	MHz
Anode voltage	V_a	=	max. 5.0	max. 4.0	kV
Anode current	I_a sync	=	max. 2.0	max. 1.6	A
Anode input power	Wi_a	=	max. 10	max. 6.4	kW
Anode dissipation	W_a sync	=	max. 4.0	max. 4.0	kW
Negative grid voltage	$-V_g$ sync	=	max. 1000	max. 1000	V
Grid dissipation	W_g sync	=	max. 120	max. 120	W

OPERATING CONDITIONS (Two tubes in push-pull, common cathode bias modulated)

Frequency	f		=	48 to 75	MHz
Bandwidth (– 3 dB)	B		=	8.0	MHz
Anode voltage	V_a		=	5.0	kV
Grid voltage	V_g	sync	=	–200	V
	V_g	black	=	–300	V
	V_g	white	=	–550	V
Anode current	I_a	sync	=	2x1.9	A
	I_a	black	=	2x1.3	A
Grid current	I_g	sync	=	2x250	mA
	I_g	black	=	2x175	mA
Driver output power	W_{dr}	sync	=	250	W
Output power	W_o	sync	=	9.5	kW
Output power in the load	W_ℓ	sync	=	6.3	kW

A.F. CLASS B AMPLIFIER AND MODULATOR

LIMITING VALUES (Absolute limits)

Anode voltage	V_a	=	max.	6.0	kV
Anode current	I_a	=	max.	1.8	A
Anode input power	W_{i_a}	=	max.	10.5	kW
Anode dissipation	W_a	=	max.	5.0	kW

OPERATING CONDITIONS (Two tubes in push-pull)

Anode voltage	V_a	=	6.0		kV
Grid voltage	V_g	=	-165		V [1])
Load resistance	$R_{aa\sim}$	=	4.9		kΩ
Grid driving voltage	V_{gg}	=	0	645	V(RMS)
Anode current	I_a	=	2x125	2x1500	mA
Grid current	I_g	=	0	2x280	mA
Driving power	W_{dr}	=	0	2x115	W
Anode input power	W_{i_a}	=	2x0.75	2x9.0	kW
Anode dissipation	W_a	=	2x0.75	2x2.35	kW
Output power	W_o	=	0	13.3	kW
Efficiency	η	=	-	74	%
Total harmonic distortion	d_{tot}	=	-	4.3	%

[1]) To be adjusted for zero signal anode current of 125 mA.

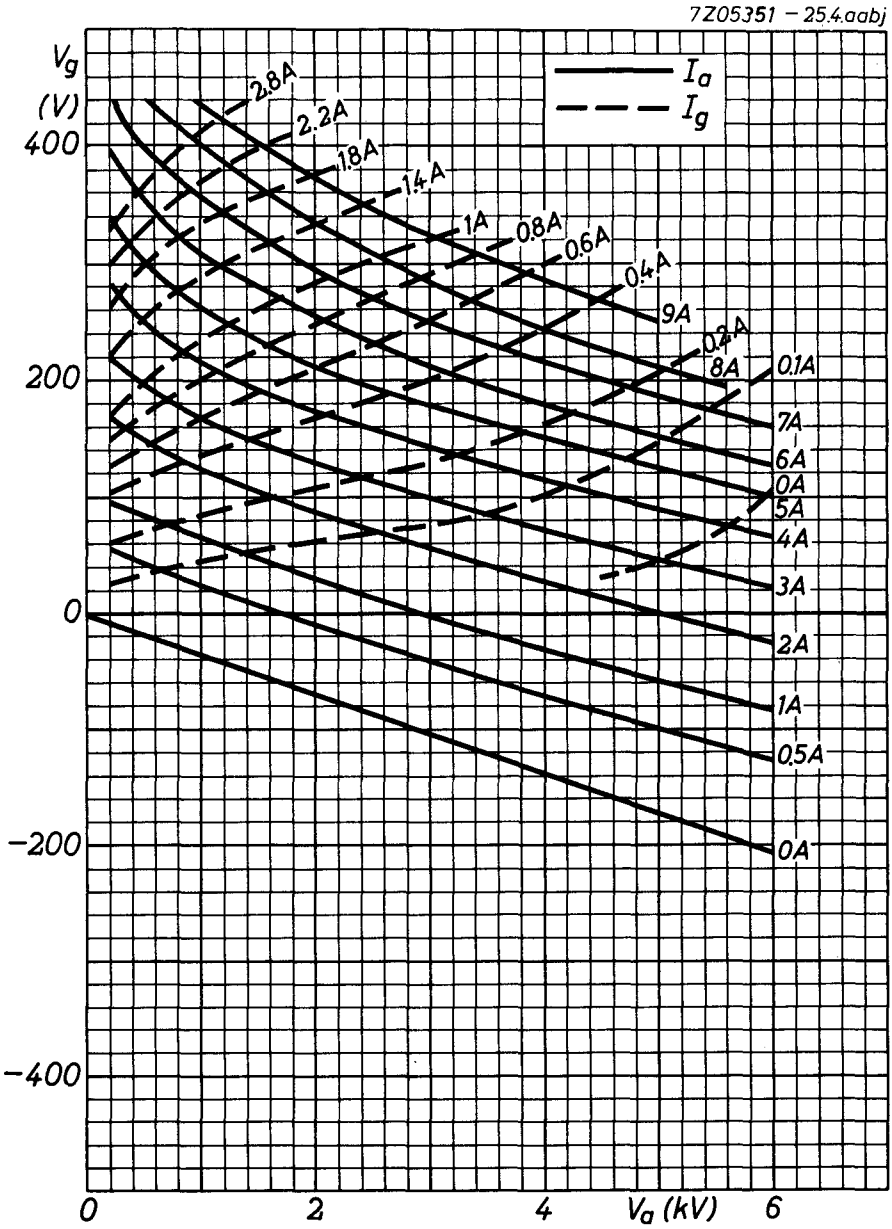
7Z05351 – 25.4.aabj
V_g
(V)
400
200
0
−200
−400
I_a
I_g
2.8A
2.2A
1.8A
1.4A
1A
0.8A
0.6A
0.4A
9A
0.2A
8A
0.1A
7A
6A
0A
5A
4A
3A
2A
1A
0.5A
0A
0
2
4
V_a (kV)
6

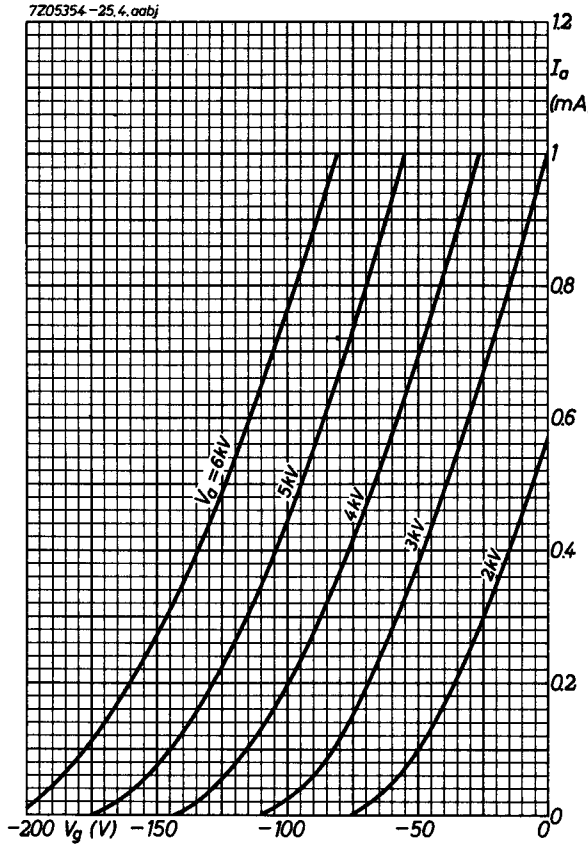
7Z05354-25.4.aabj
1.2
I_a
(mA)
1
0.8
0.6
0.4
0.2
0
V_a = 6kV
5kV
4kV
3kV
2kV
-200
V_g (V)
-150
-100
-50
0

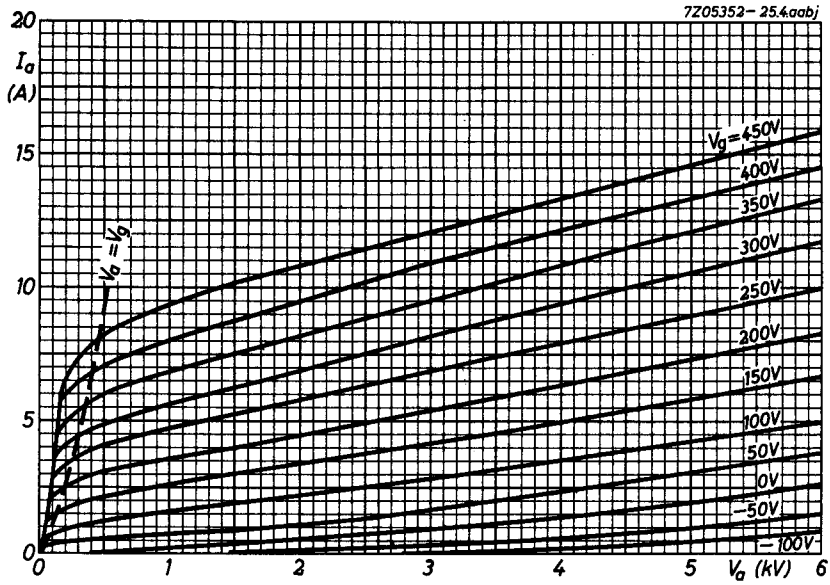
7Z05352-25.4aabj
20
I_a
(A)
15
10
5
0
0
1
2
3
4
5
V_a (kV)
6
$V_g = 450V$
400V
350V
300V
250V
200V
150V
100V
50V
0V
−50V
−100V
$V_a = V_g$

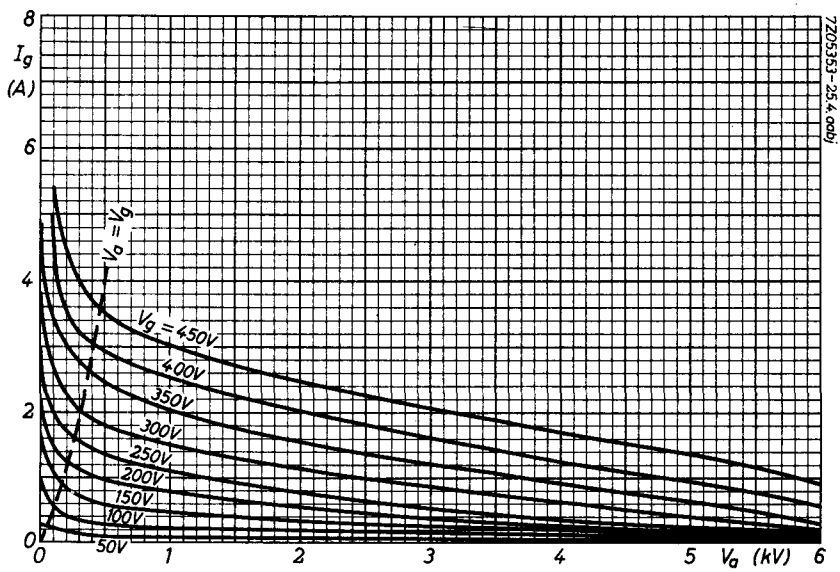
7Z05353-25.4aabj
8
I_g
(A)
6
4
2
0
0
1
2
3
4
5
V_a (kV)
6
$V_a = V_g$
$V_g = 450V$
400V
350V
300V
250V
200V
150V
100V
50V