# Y503

TECHNICAL DATA

HIGH-MU
PLANAR TRIODE

The EIMAC Y503 is a small frequency stable rugged planar triode which has been specially processed and tested to assure the high reliability demanded and required in airborne service. The tube is supplied without radiator for conduction and/or convection or heat sink cooling.

The tube may be used as an amplifier, oscillator, or frequency multiplier in grid or plate pulsed applications. In addition to the low interelectrode capacitances, high transconductance and Mu, the tube exhibits such special design features as a frequency-stable anode and an arc-resistant cathode to assure stable operation under adverse conditions and minimize catastrophic failure due to arcover if it should occur due to circuit malfunction.

The tube is usable from low frequency to 3 GHz.

## GENERAL CHARACTERISTICS[1]

### ELECTRICAL

| | |
|---|---|
| Cathode: Oxide Coated, Unipotential | |
| Heater: Voltage | 6.0 ± 0.3 V |
| Current, at 6.0 volts | 1.00 A |
| Transconductance (Average): | |
| $I_b$ = 70 mA | 25 mmhos |
| Amplification Factor (Average): | 80 |
| Direct Interelectrode Capacitances (Grounded Cathode)[2] | |
| Cin | 6.8 pF |
| Cout | 0.04 pF |
| Cgp | 2.50 pF |
| Cut-off Bias[3] | -30 V max. |

1. Characteristics and operating values are based upon performance tests. These figures may change without notice as the result of additional data or product refinement. EIMAC Division of Varian should be consulted before using this information for final equipment design.
2. Capacitance values for a cold tube as measured in a special shielded fixture in accordance with Electronic Industries Association Standard RS-191.
3. Measured with one milliampere plate current and a plate voltage of 1 kVdc.

### MECHANICAL

| | |
|---|---|
| Maximum Overall Dimensions: | |
| Length | 1.810 in; 45.97 mm |
| Diameter | 0.792 in; 20.12 mm |

(Effective 5-1-75) © by Varian

Printed in U.S.A.

| | |
|---|---|
| Net Weight | 18 gm |
| Operating Position | Any |
| Maximum Operating Temperature: | |
| Ceramic/Metal Seals | 250°C |
| Anode Core | 250°C |
| Cooling | Conduction, convection |
| Terminals | Coaxial, special |

**ENVIRONMENTAL**

| | |
|---|---|
| Shock, 11 ms, non-operating | 60 G |
| Vibration, operating, all axes 55 to 500 Hz | 10 G |
| Altitude, max (in a suitably designed circuit) | 50,000 ft. |

**GRID PULSED OR PLATE PULSED AMPLIFIER OR OSCILLATOR**

MAXIMUM RATINGS/ABSOLUTE VALUES

| | |
|---|---|
| DC PLATE VOLTAGE (grid pulsed) | 2500 VOLTS |
| PEAK PULSE PLATE VOLTAGE (plate pulsed) | 3500 VOLTS |
| DC GRID VOLTAGE | -150 VOLTS |
| INSTANTANEOUS PEAK GRID CATHODE VOLTAGE | |
| Grid negative to cathode | -700 VOLTS |
| Grid positive to cathode | 250 VOLTS |
| PULSE PLATE CURRENT | 3.0 AMPERES |
| PULSE GRID CURRENT | 1.5 AMPERES |
| PLATE DISSIPATION (Average) Conduction & Convection | 10 WATTS * |
| GRID DISSIPATION | 2.0 WATTS |
| FREQUENCY | 3.0 GIGAHERTZ |
| PULSE DURATION [1] | 6 μsec |
| DUTY FACTOR [1] | .0033 |

TYPICAL OPERATION Grid Pulsed Oscillator, Representative Application

| | |
|---|---|
| Plate Voltage | 2000 Vdc |
| Grid Voltage | -75 Vdc |
| Heater Voltage | 5.7 V |
| Peak Video Plate Current | 1.3 a |
| Peak Video Grid Current | 0.8 a |
| Useful Power Output (approx.) | 750 w |
| Frequency | 1.090 GHz |
| Pulse Duration | 0.5 μs |
| Duty Factor | .001 |

1. For application requiring longer pulse duration and/or higher duty cycle consult the nearest Varian Electron Tube and Device Field Office, or the Product Manager EIMAC Division of Varian, Salt Lake City, Utah.

* Plate dissipation of up to 100 Watts is permissable with adequate cooling.

**RANGE VALUES FOR EQUIPMENT DESIGN**

| | Min. | Max. | |
|---|---|---|---|
| Heater: Current at 6.0 volts | 0.90 | 1.05 | A |
| Cathode Heating Time | 60 | --- | sec. |
| Interelectrode Capacitances [1] (grounded cathode connection) | | | |
| Cin | 6.00 | 7.50 | pF |
| Cout | --- | 0.04 | pF |
| Cgp | 2.25 | 2.60 | pF |

1. Capacitance values for a cold tube as measured in a special shielded fixture. When the cathode is heated to the proper temperature, the grid-cathode capacitance will increase from the cold value by approximately 1 pF due to thermal expansion of the cathode.

## APPLICATION

For general application information please refer to the Planar Triode Operating Instruction Sheet. The operating instructions should be consulted prior to the designing of new requirements around the above tube type. For unusual and special applications consult the nearest Varian Electron Tube Field Office, or Product Manager, EIMAC Division of Varian, Salt Lake City, Utah.

The cathode and grid terminals should not be altered such as by machining or filing, since final seal could be damaged. Maximum torque applied to the tube during installation should not exceed 15 inch pounds.

For optimum performance, the anode line should make good rf contact on the anode area.

Soldered connections may be made to the anode stud, grid or cathode terminals, and heater contact where adequate heat sinking and good soldering practices are followed to minimize the heat applied to the tube and the thermal gradient across the metal to ceramic brazed areas.

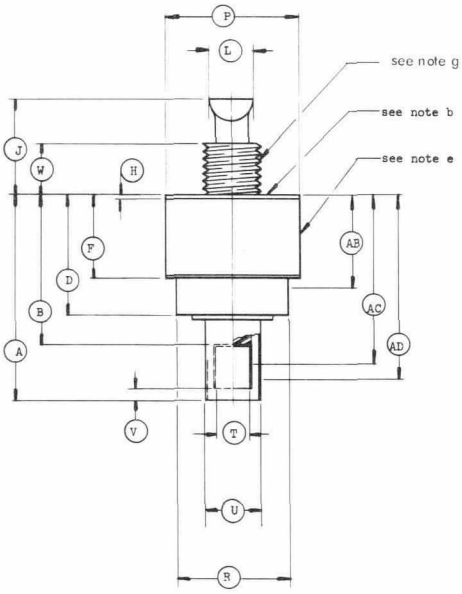


| DIMENSIONAL DATA | | | | | | |
|---|---|---|---|---|---|---|
| DIM | INCHES | | | MILLIMETERS | | |
| | MIN. | MAX. | REF. | MIN. | MAX. | REF. |
| A | 1.125 | 1.210 | - - | 28.58 | 30.73 | - - |
| B | - - | 0.865 | - - | - - | 21.97 | - - |
| D | 0.782 | 0.822 | - - | 19.86 | 20.88 | - - |
| F | - - | 0.475 | - - | - - | 12.07 | - - |
| H | - - | - - | 0.030 | - - | - - | 0.762 |
| I | 0.345 | 0.375 | - - | 8.76 | 9.53 | - - |
| J | - - | 0.600 | - - | - - | 15.24 | - - |
| L | - - | 0.260 | NOTE e | - - | 6.60 | NOTE e |
| P | 0.752 | 0.792 | NOTE e | 19.10 | 20.12 | NOTE e |
| R | 0.655 | 0.665 | NOTE d,b | 16.64 | 16.89 | NOTE d,b |
| T | 0.213 | 0.223 | NOTE d,b | 5.41 | 5.66 | NOTE d,b |
| U | 0.315 | 0.325 | NOTE d,b | 8.00 | 8.26 | NOTE d,b |
| V | - - | 0.086 | - - | - - | 2.18 | - - |
| ELECTRODE CONTACT AREA DIMENSIONS | | | | | | |
| AB | 0.695 | 0.775 | NOTE b | 17.65 | 19.68 | NOTE b |
| AC | 0.860 | 1.046 | NOTE b | 21.84 | 26.57 | NOTE b |
| AD | 0.800 | 1.090 | NOTE b | 20.32 | 27.69 | NOTE b |

NOTES:

a. Metric equivalents to the nearest .01mm are given for general information only & are based on 1 inch = 25.4 mm.
b. This surface shall be used to measure Anode shank temperature.
c. The total indicated runout of the Grid contact surface (DIMS AB & R) and Cathode contact surface (DIMS AC & U) will not exceed .020. This measurement is made with the gage (J-21685) screwed on the Anode thread so that the face of the gage makes full contact with the Anode contact surface. Runout is then measured by the O.D. of the gage as the reference surface. The total indicated runout of the Cathode contact surface using the Heater contact surface as the reference will not exceed .012.
d. Dias. R, T, U shall apply throughout entire contact area as defined by dims. AB, AC, AD.
e. This surface shall not be used for clamping or locating.
f. Electrode Contact Dims. are given for socket design & are not intended for inspection purposes.
g. Thread 3/8-16 UNC-2A.

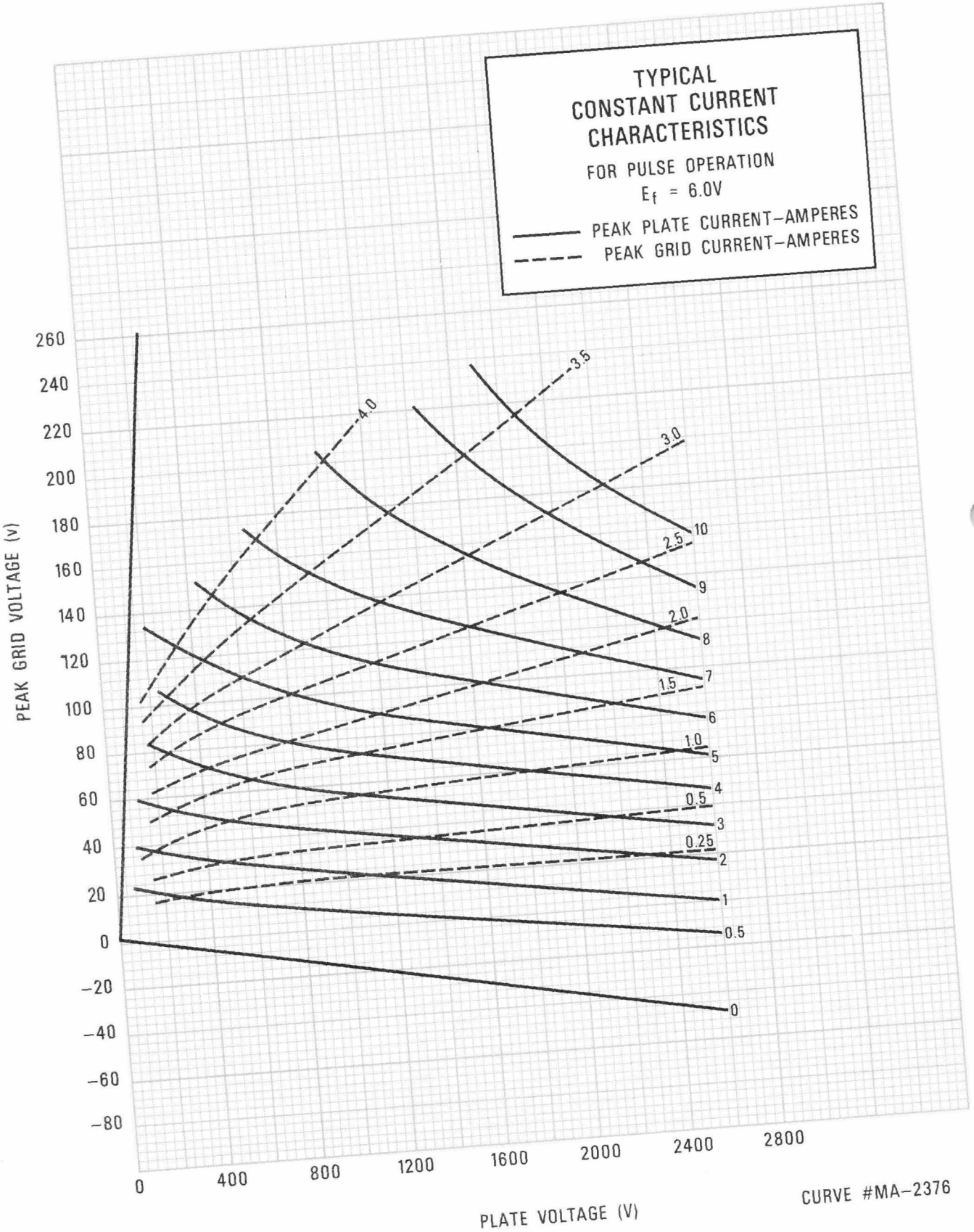
TYPICAL
CONSTANT CURRENT
CHARACTERISTICS
FOR PULSE OPERATION
$E_f$ = 6.0V
PEAK PLATE CURRENT–AMPERES
PEAK GRID CURRENT–AMPERES
PEAK GRID VOLTAGE (V)
260
240
220
200
180
160
140
120
100
80
60
40
20
0
−20
−40
−60
−80
0
400
800
1200
1600
2000
2400
2800
PLATE VOLTAGE (V)
4.0
3.5
3.0
2.5
2.0
1.5
1.0
0.5
0.25
10
9
8
7
6
5
4
3
2
1
0.5
0
CURVE #MA–2376

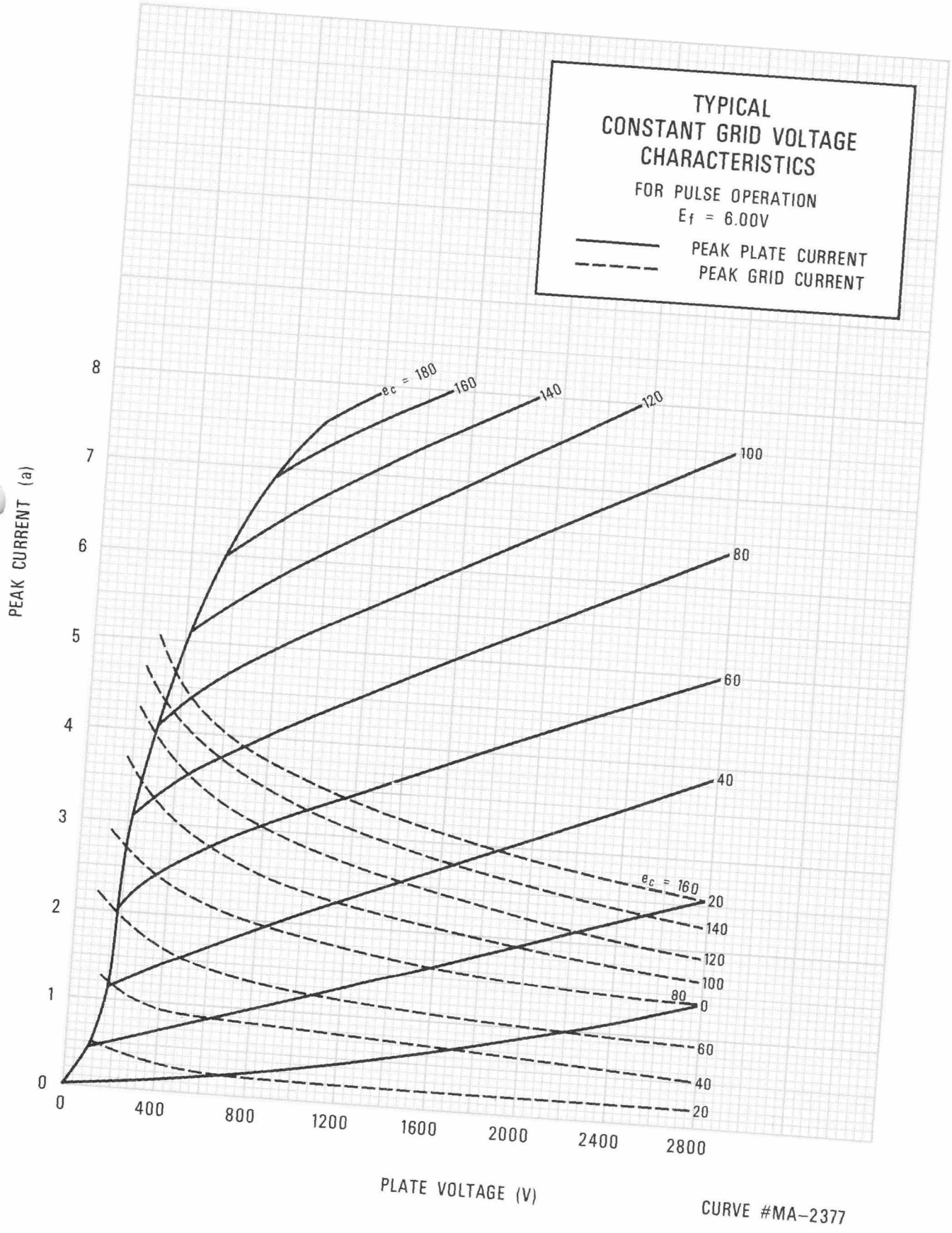




CURVE #MA-2377