Central ELECTRONIC MANUFACTURERS

DENVILLE, NEW JERSEY

GAS NOISE TUBE	X
XD-44A/CNT-X15D-4	15.3 Db

References and notations contained herein are taken from Military Specifications for Electron tubes MIL-E-1D 31 March '58.

Description: Gaseous Discharge Diode, X Band (Note 11)

Ratings:

	If	Ib	TA	T Bulb
Absolute	mA	mAdc	°C	°C
Maximum:	. .	. .	+85	+125
Minimum:	. .	. .	-55	. .
Test Conditions:	0	200	. .	. .

Cathode: Filamentary Type.
Dimensions: Per Outline Drawing (Fig. 1)
Base: Per Outline Drawing (Fig. 1)
Mounting Position: Any

Ref. Para.	Test	Conditions	Min.	Max.
. . .	Qualification:	Required.		
4.5	Holding Period:	168 hours		
4.9.18.1.10	Carton Drop:	. . .		
4.9.20.3	*Vibration:	No Voltages, Note 9.		
4.10.5.1	Filament Voltage:	I_f=170mAdc	E_f. . .	10Vdc
4.13.2	Tube Voltage Drop:	Note 1,2	E_{td}65	75Vdc
. . .	Excess Noise Ratio:	F=8500 Mc. Notes 3,4,5,10.	N_r-1 15.05	15.45Db
. . .	Match (1):	F=8500 Mc. Notes 4,6. I_b=200 mAdc	VSWR	1.07:1
. . .	*Match (2):	F=8500 Mc. I_b=0 mAdc Notes 4,6.	VSWR	1.07:1
. . .	Intermittent Life Test	Notes 1,3,8,9. (One min. on, two min. off) Preheat time=2 to 3 sec.	2500	Cycles
4.11.4	Intermittent Life Test End Points Excess Noise Ratio: Note 11.		N_r-1 15.0	15.5Db

Note 1. The tube shall be tested in the circuit of Fig. 3.
Note 2. In the test circuit of Fig. 3, with a filament current of 170 mAdc, the tube shall operate within three tries.
Note 3. The tube shall be tested in total darkness.
Note 4. The tube shall be tested in a tube mount as specified in Figure 2, or equivalent, terminated by a matched RG-51/U termination having a VSWR no greater than 1.01:1.
Excessive Noise Ratio Measurement tests shall be made using the circuit of block diagram Fig. 4, or equivalent.
Note 5. The frequency specified is that of the Local Oscillator.
Note 6. The frequency specified is that of the Signal Generator.
Note 7. Excess noise ratio should be measured by comparison with an approved standard.
Note 8. The tube shall be tested at an ambient temperature of +85°C.
Note 9. Intermittent Life Test end points shall apply.
Note 10. The Excess Noise Ratio (N_r-1) is defined in Db as N_r-1 = 10 $\log\left(\frac{T_e}{290}-1\right)$ where T_e is the effective electron temperature.
Note 11. The noise frequencies generated by this tube cover a broad band of frequencies. This bandwidth is limited only by the type of mount used. This tube is normally used with a mount in RG-51/U wave guide, at a 10 degree angle in the E plane. Other wave guide sizes may be used with properly adapted mounts.

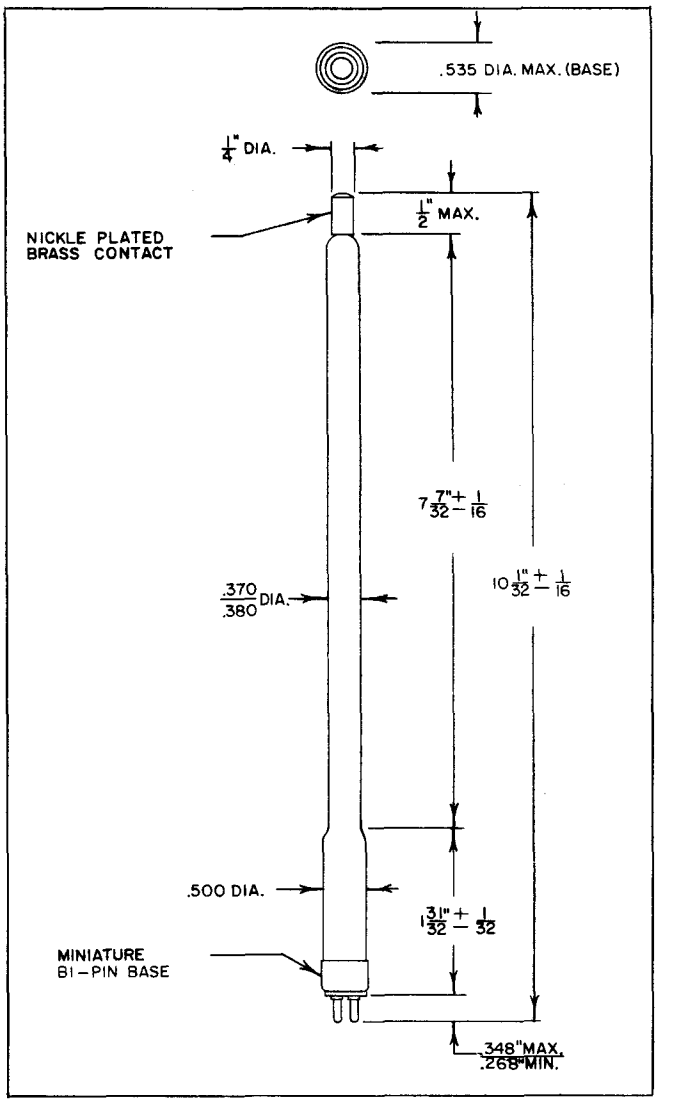

FIG. 1

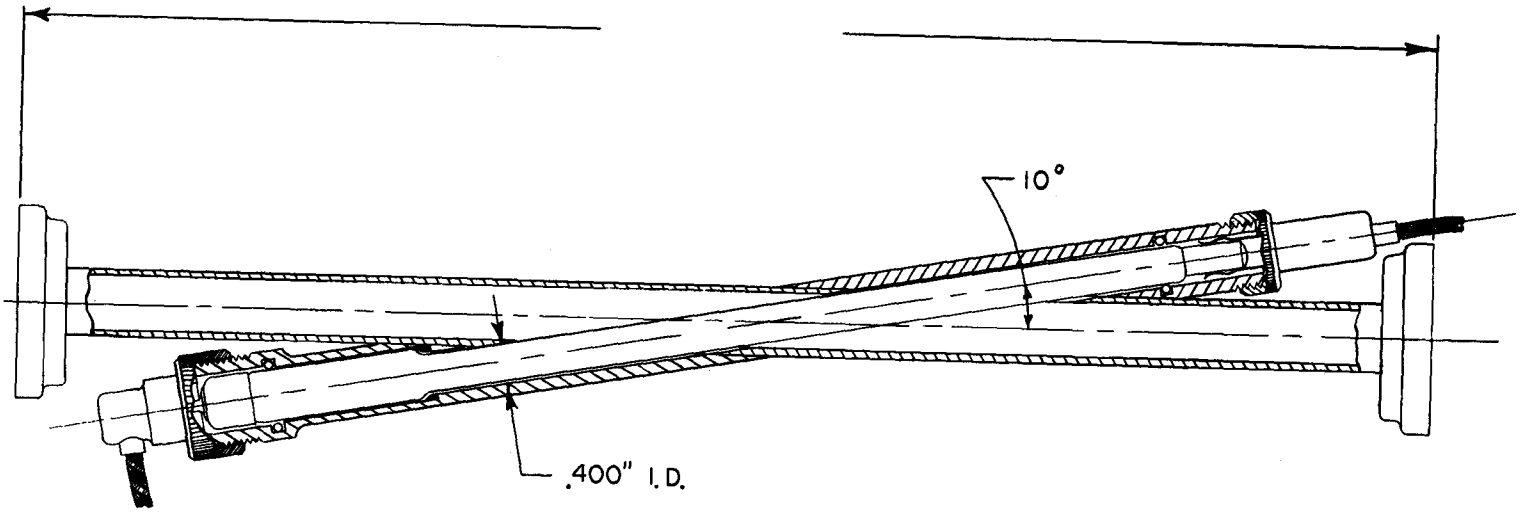

FIG. 2

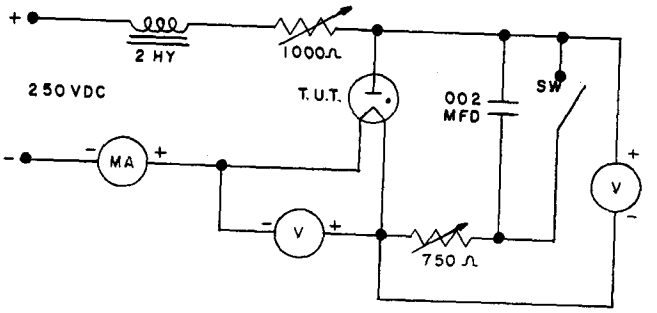

D. C. TEST CIRCUIT

FIG. 3

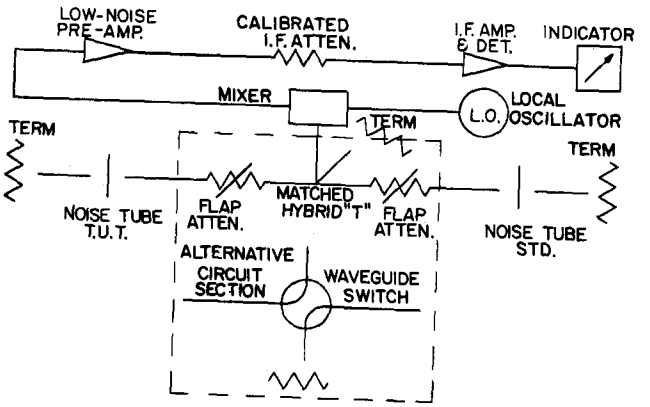

TEST CIRCUIT FOR EXCESS NOISE MEASUREMENTS
FIG. 4