Velocity-Modulated Oscillator

Code: V249C/1K

The V249C/1K is a low voltage coaxial type velocity-modulated oscillator for the frequency range 4 760 to 5 000 Mc/s, capable of being frequency modulated.

CATHODE

Indirectly-heated, oxide-coated

Heater voltage	6.3	V
Nominal current	0.3	A

DIMENSIONS

Maximum overall length	80	mm
Maximum bulb diameter	20.1	mm
Base	B7G	
Net weight	22	g

MOUNTING

This valve is designed to mount by means of the resonator disc so that the antenna couples with a suitable tuned circuit.

MAXIMUM RATINGS

Maximum mean input power to all electrodes other than the heater	18	W
Maximum direct cathode current	65	mA
Maximum direct screen voltage	400	V
Maximum direct screen dissipation	1.5	W

© *1957 Standard Telephones and Cables Limited*

Velocity-Modulated Oscillator

Code: V249C/1K

TYPICAL OPERATING CONDITIONS

Oscillator in the frequency range 4 760 to 5 000 Mc/s

Grid Voltage (V_{g1})

40 volts negative with respect to cathode. The use of bias improves the proportion of cathode current which passes the resonator and reaches the anode. See Figure 4 for a sketch of the electrode assembly.

Screen Voltage (V_{g2})

Adjusted to give a cathode current of 50 mA and should be varied during the valve life so as to maintain the cathode current at a constant value. Where the valve is to be used in unattended equipment, it is recommended that this variation be made automatically. The anode current should be between 33 and 40 mA.

A typical value of screen voltage is 120 volts.

Screen Current (I_{g2})

This will not be greater than 5 mA provided that the screen voltage does not exceed the resonator voltage.

Resonator Voltage (V_{res})

This should be adjusted to give maximum power output and varies between 240 and 290 volts over the mechanical tuning band.

Anode Voltage (V_a)

This is kept constant throughout the tuning band at 310 volts.

PERFORMANCE

This valve should be operated in a tuning circuit as shown in Figure 5 with the coupling slug and the resonator voltage adjusted for maximum power output. With the operating conditions as specified, the following performance should be obtained.

Power output, minimum	200	mW
Variation of output with frequency over the specified tuning range, less than	3	db
Electronic tuning range, between half power points, minimum	8.0	Mc/s

Typical curves of power output, electronic tuning range and circuit length versus frequency are shown on Figures 1, 2 and 3.

Velocity-Modulated Oscillator

Code: V249C/1K

MODULATION

Frequency modulation is obtained by variation of the resonator voltage. The figures for electronic tuning range are those for the valve loaded so as to give maximum output power and the modulation sensitivity under these conditions is between 0.4 and 0.6 Mc/s per volt. If the loading on the valve is reduced, the electronic tuning range will be increased somewhat but the sensitivity will be reduced. The change in slope of the characteristic will be about 10 per cent for a deviation of about 60 to 70 per cent of the half power value.

Distortion components for small deviations (less than ±2 Mc/s) at the correct resonator voltage will be about 50 db down on the fundamental.

The input capacitance when using the circuit shown in Figure 5 is between 20 and 30 pF.

THERMAL DRIFT AND STABILITY

The total thermal drift from cold to the final operating frequency is between 7 and 10 Mc/s and is completed in about 5 minutes.

The frequency change with ambient temperature is about 50 kc/s per degree centigrade.

MAGNET AND MAGNET ALIGNMENT

A permanent magnet is used to form the electron beam. The recommended magnet is Jessop Type No. 10512, but any magnet giving a uniform field of approximately 1 200 oersteds over a 22 mm gap can be used. The magnet must be aligned so that the best ratio of anode current to cathode current is obtained (see Figure 4). Three holes are punched in the valve disc and locate on pins fixed to the valve clamping plate. Once the magnet has been aligned, and has been securely clamped with respect to the locating pins, no further adjustment will be necessary when replacing valves. It is recommended that at least three, and preferably six, valves are used to establish the initial alignment of the magnet.

Velocity-Modulated Oscillator

Code: V249C/1K

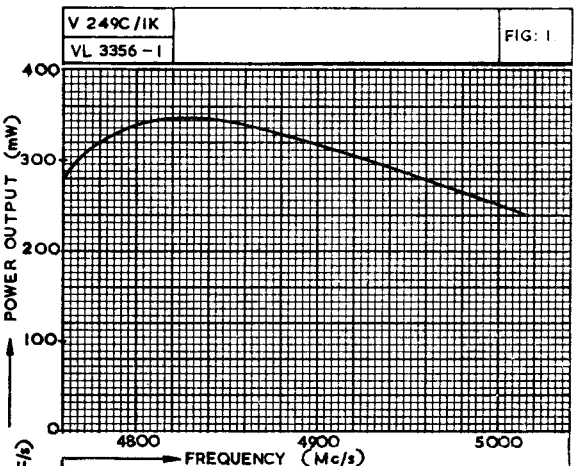

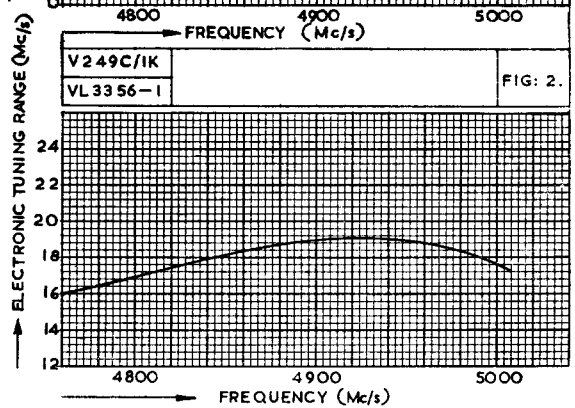

Velocity-Modulated Oscillator

Code: V249C/1K

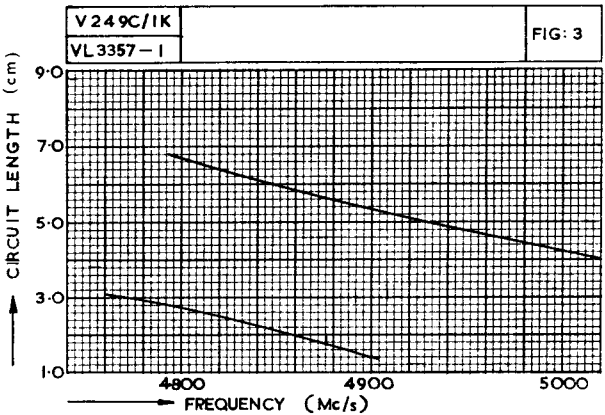

Velocity-Modulated Oscillator

Code: V249C/1K

FIG. 4

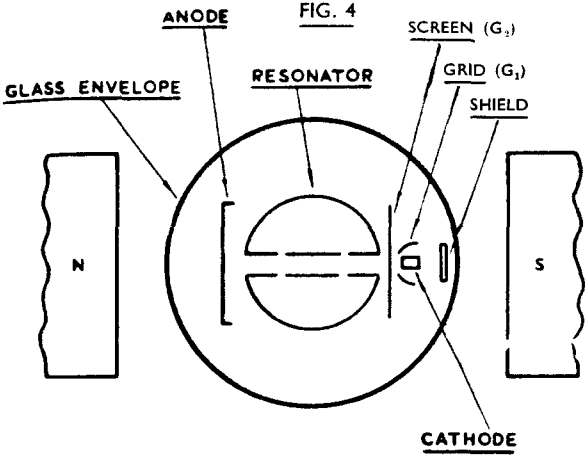

CROSS SECTION OF VALVE ASSEMBLY

FIG. 5.

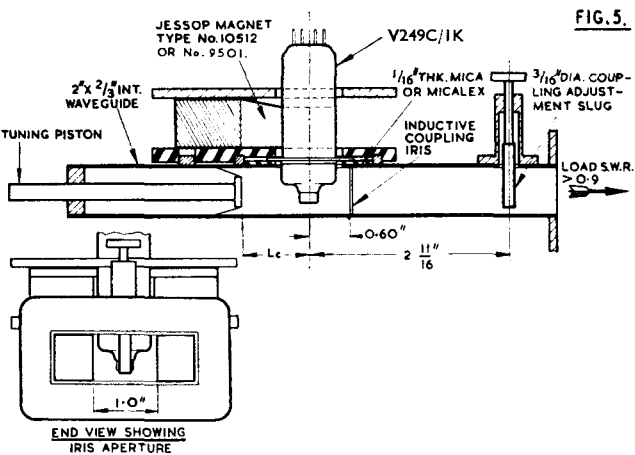

Velocity-Modulated Oscillator

Code: V249C/1K

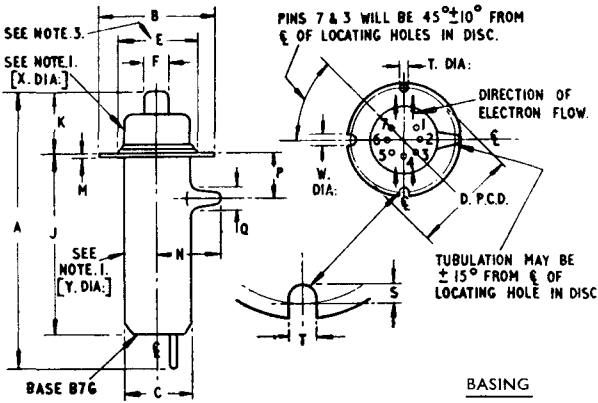

NOTE 1. THIS PORTION OF BULB WILL NOT FOUL A CYLINDER OF INT. DIA. SPECIFIED WHICH IS CONCENTRIC WITH THE PITCH CIRCLE OF THE LOCATING HOLES IN DISC.

NOTE 2. BASIC FIGURES ARE INCHES.

NOTE 3. ALSO MIN. CLAMPING DIA.

BASING

1. CONTROL GRID
2. CATHODE
3. HEATER
4. HEATER
5. ANODE
6. RESONATOR
7. SCREEN GRID

DIM	MILLIMETRES	INCHES	DIM	MILLIMETRES	INCHES
A	80 MAX.	3·15 MAX.	P	13·5 ± 4·0	0·53 ± 0·16
B	31·75 MAX.	1¼ MAX.	Q	8·5 MAX.	0·33 MAX.
C	20·1 MAX.	0·79 MAX.	S	1·6 +0·13 −0·00	0·062 +0·005 −0·000
D	30·96 ± 0·06	1·218 ± 0·002			
E	24 MAX.	0·94 MAX.	T	2·36 +0·06 −0·00	0·093 +0·002 −0·000
F	8·12 MAX.	0·320 MAX.			
J	56 MAX.	2·2 MAX.	V	2·79 +0·13 −0·00	0·110 +0·005 −0·000
K	16·5 MAX.	0·65 MAX.			
M	0·3 MAX.	0·012 MAX.	X	21·59 MIN.	0·850 MIN.
N	18 MAX.	0·710 MAX.	Y	20·32 MIN.	0·800 MIN.