DOUBLE DIODE-TRIODE

Double diode-triode. Triode intended for use as A.F. amplifier.

QUICK REFERENCE DATA			
Triode section			
Anode current	I_a	1.5	mA
Transconductance	S	1.65	mA/V
Amplification factor	μ	70	-

HEATING: Indirect by A.C. or D.C.; series supply

Heater current	I_f	100	mA
Heater voltage	V_f	14	V

DIMENSIONS AND CONNECTIONS Dimensions in mm

Base: Noval

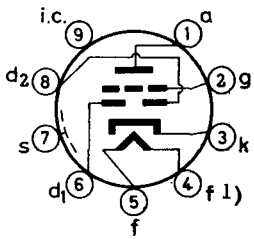

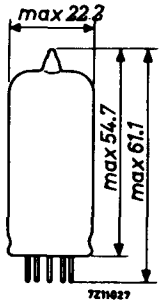

[1]) Earthed side of the heater circuit.

CAPACITANCES

Triode section

Grid to all except anode	$C_{g(a)}$		2.3	pF
Anode to all except grid	$C_{a(g)}$		2.3	pF
Anode to grid	C_{ag}		1.2	pF
Grid to heater	C_{gf}	max.	0.05	pF

Diode sections

Diode No.1 to all	C_{d_1}		0.9	pF
Diode No.2 to all	C_{d_2}		0.9	pF
Diode No.1 to diode No.2	$C_{d_1d_2}$	max.	0.2	pF
Diode No.1 to heater	C_{d_1f}	max.	0.25	pF
Diode No.2 to heater	C_{d_2f}	max.	0.05	pF

Between triode and diode sections

Diode No.1 to grid	C_{d_1g}	max.	0.007	pF
Diode No.2 to grid	C_{d_2g}	max.	0.007	pF
Diode No.1 to anode	C_{d_1a}	max.	0.005	pF
Diode No.2 to anode	C_{d_2a}	max.	0.01	pF

TYPICAL CHARACTERISTICS OF THE TRIODE SECTION

Anode voltage	V_a	170	100	V
Grid voltage	V_g	-1.55	-1.0	V
Anode current	I_a	1.5	0.8	mA
Transconductance	S	1.65	1.4	mA/V
Amplification factor	μ	70	70	-
Internal resistance	R_i	42	50	kΩ

OPERATING CHARACTERISTICS

Triode section as A.F. amplifier, circuit Fig.1

Supply voltage	V_b	170	100	170	100	V
Anode resistor	R_a	0.22	0.22	0.1	0.1	MΩ
Cathode resistor	R_k	5.6	5.6	3.9	3.9	kΩ
Grid resistor	R_g	1.0	1.0	1.0	1.0	MΩ
Grid resistor next stage	R_g	0.68	0.68	0.33	0.33	MΩ
Anode current	I_a	0.28	0.18	0.45	0.28	mA
Voltage gain	V_o/V_i	44	41	37	34	
Distortion at:						
output voltage V_o = 3 V_{RMS}	d_t	1.1	1.4	1.1	2.0	%
output voltage V_o = 5 V_{RMS}	d_t	1.3	1.9	1.7	3.5	%
output voltage V_o = 8 V_{RMS}	d_t	1.85	-	2.6	-	%
Supply voltage	V_b	170	100	170	100	V
Anode resistor	R_a	0.22	0.22	0.1	0.1	MΩ
Cathode resistor	R_k	0	0	0	0	Ω
Grid resistor	R_g	22	22	22	22	MΩ
Grid resistor next stage	R_g'	0.68	0.68	0.33	0.33	MΩ
Anode current	I_a	0.46	0.21	0.82	0.35	mA
Voltage gain	V_o/V_i	48	41	42	35	
Distortion at						
output voltage V_o = 3 V_{RMS}	d_t	0.95	1.45	0.75	1.6	%
output voltage V_o = 5 V_{RMS}	d_t	1.1	2.0	1.0	2.8	%
output voltage V_o = 8 V_{RMS}	d_t	1.3	-	1.2	-	%

OPERATING CHARACTERISTICS (continued)

Microphony

No special precautions against microphony are required in circuits where the input voltage is min. 10 mV for 50 mW output of the output tube.

Fig.1

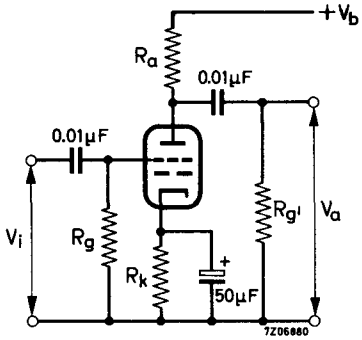

LIMITING VALUES (Design centre rating system)

Triode section

Anode voltage	V_{a_o}	max.	550	V
	V_a	max.	250	V
Anode dissipation	W_a	max.	0.5	W
Cathode current	I_k	max.	5	mA
Grid resistor	R_g	max.	3	MΩ
Cathode to heater voltage	V_{kf}	max.	100	V

Diode sections (each diode)

Diode voltage, negative peak	$-V_{d_p}$	max.	350	V
Diode current:				
average	I_d	max.	0.8	mA
peak	I_{d_p}	max.	5	mA
Cathode to heater voltage	V_{kf}	max.	100	V