V.H.F. INDUSTRIAL TRIODE

TY6-3000A

QUICK REFERENCE DATA

Forced-air cooled triode intended for use as Class 'C' industrial oscillator.

f	30	Mc/s
P_{out}	7.6	kW
f max.	150	Mc/s
V_a max.	6.0	kV
p_a max.	3.0	kW

To be read in conjunction with

GENERAL OPERATIONAL RECOMMENDATIONS - TRANSMITTING VALVES

INDUSTRIAL OSCILLATOR, CLASS 'C'

OPERATING CONDITIONS

f	30	30	Mc/s
P_{out}	5.8	7.6	kW
P_{load}	5.0	6.7	kW
Duty factor	1.0	1.0	
η_a	77	78	%
V_a	5.0	6.0	kV
I_a	1.5	1.63	A
$-V_g$	300	350	V
I_g	300	310	mA
R_{g-f}	1.0	1.13	kΩ
Feedback ratio $\frac{V_{in(pk)}}{V_{a(pk)}}$	0.125	0.12	
P_{drive}	157	180	W
p_a	1.7	2.2	kW
p_g	76	84	W

RATINGS (ABSOLUTE MAXIMUM SYSTEM)

f max.	150	Mc/s
V_a max.	7.0	kV
$-V_g$ max.	1.0	kV
I_g max.	350	mA
I_k max.	2.5	A
$i_{k(pk)}$ max.	15	A
p_a max.	3.0	kW
p_g max.	110	W
R_{g-f} max.	10	kΩ

CATHODE

Directly heated, thoriated tungsten

V_f	12.6	V
I_f	33	A

CAPACITANCES

c_{a-g}	24	pF
c_{out}	0.5	pF
c_{in}	21	pF

CHARACTERISTICS (measured at V_a = 2.5kV, I_a = 0.9A)

g_m	22	mA/V
μ	26	

MOUNTING POSITION

Vertical, with base up or down

COOLING

Forced-air cooled (see curves on pages C4 and C5)

Maximum temperatures

Anode and grid seals	180	°C
Filament seals	210	°C

The amount of forced-air cooling required for the anode of this valve depends upon the anode dissipation and temperature and pressure of inlet air.

PHYSICAL DATA

	lb	kg
Weight of valve	8.4	3.8

DIMENSIONS

	Inches	Millimetres	
A	8.46	215	max.
B	6.075 ± 0.059	154.3 ± 1.5	
C	3.406 ± 0.039	86.5 ± 1.0	
D	4.252 ± 0.078	108 ± 2.0	
E	3.425 ± 0.039	88 ± 1.0	
F	1.378 ± 0.039	35 ± 1.0	
G	0.866 ± 0.078	20 ± 2.0	
H	2.500	63.5	max.
J	0.315 ± 0.019	8.0 ± 0.5	
K	4.567 ± 0.019	116 ± 0.5	dia.
L	1.969 ± 0.008	50 ± 0.2	dia.
M	5.929 ± 0.039	150.6 ± 1.0	dia.
N	0.063 ± 0.007	1.6 ± 0.2	
P	0.178 ± 0.008	4.5 ± 0.2	
Q	0.145 ± 0.002	3.70 ± 0.05	
R	4 x 0.010	4 x 0.25	
S	0.78	20	max.
U	6.512 ± 0.019	165.4 ± 0.5	
V	6.256 ± 0.019	158.9 ± 0.5	
W	0.182 ± 0.004	4.62 ± 0.1	
Z	0.205 ± 0.008	5.20 ± 0.20	

Inch dimensions derived from original millimetre dimensions

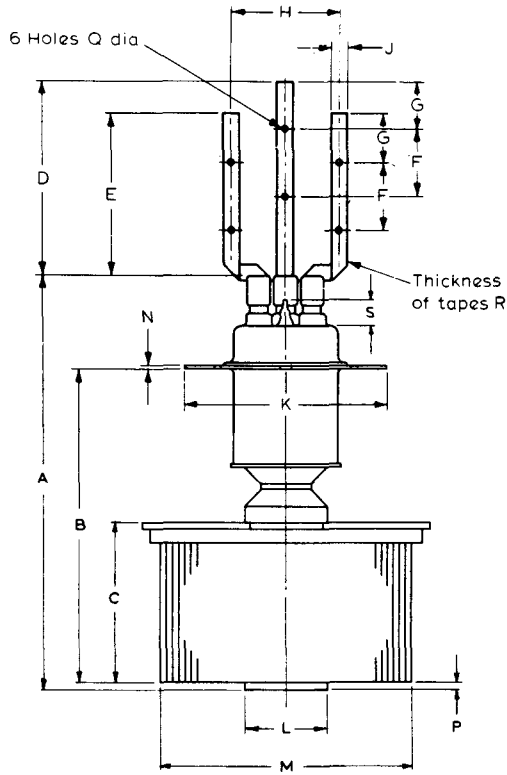
B5008
6 Holes Q dia
H
J
G
G
F
F
D
E
Thickness of tapes R
S
N
K
A
B
C
L
P
M

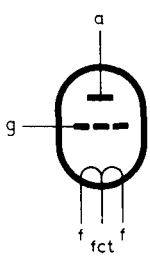
a
g
f
fct
f

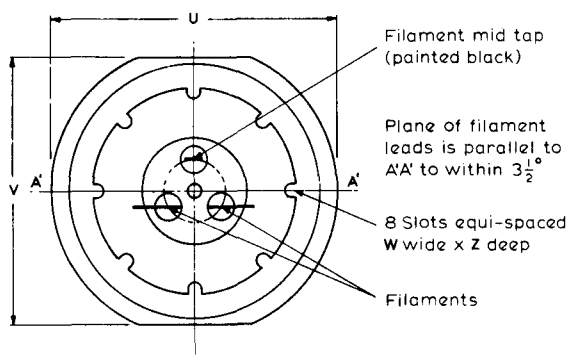
U
V
A'
A'
Filament mid tap (painted black)
Plane of filament leads is parallel to A'A' to within 3½°
8 Slots equi-spaced W wide x Z deep
Filaments

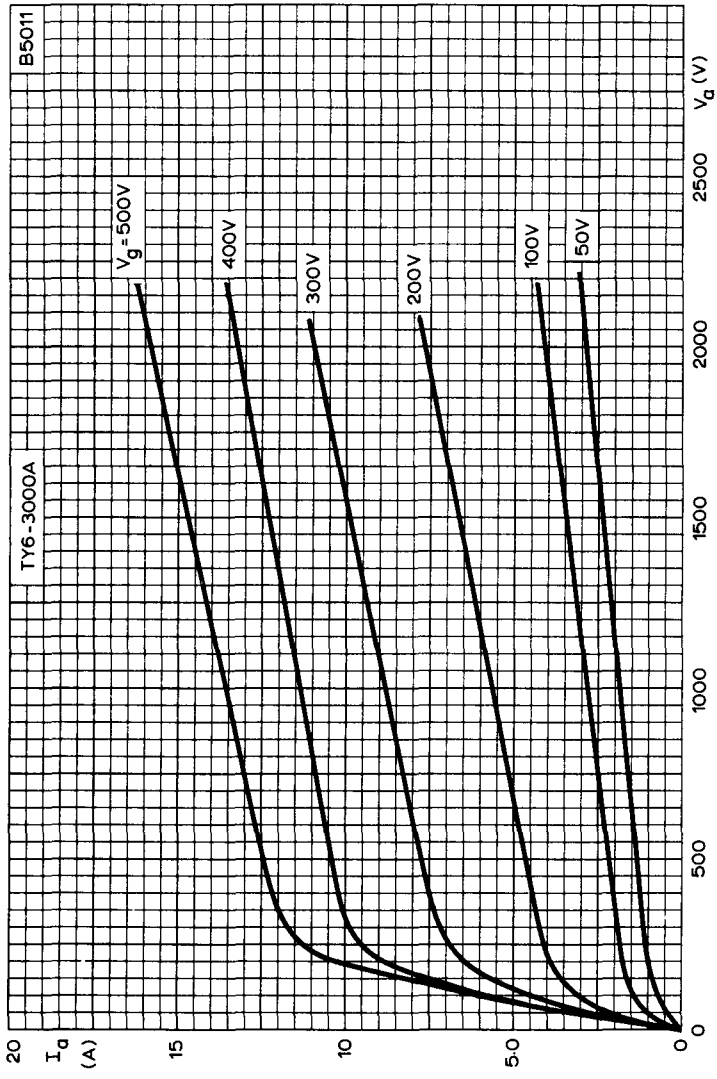

ANODE CURRENT PLOTTED AGAINST ANODE VOLTAGE WITH GRID VOLTAGE AS PARAMETER

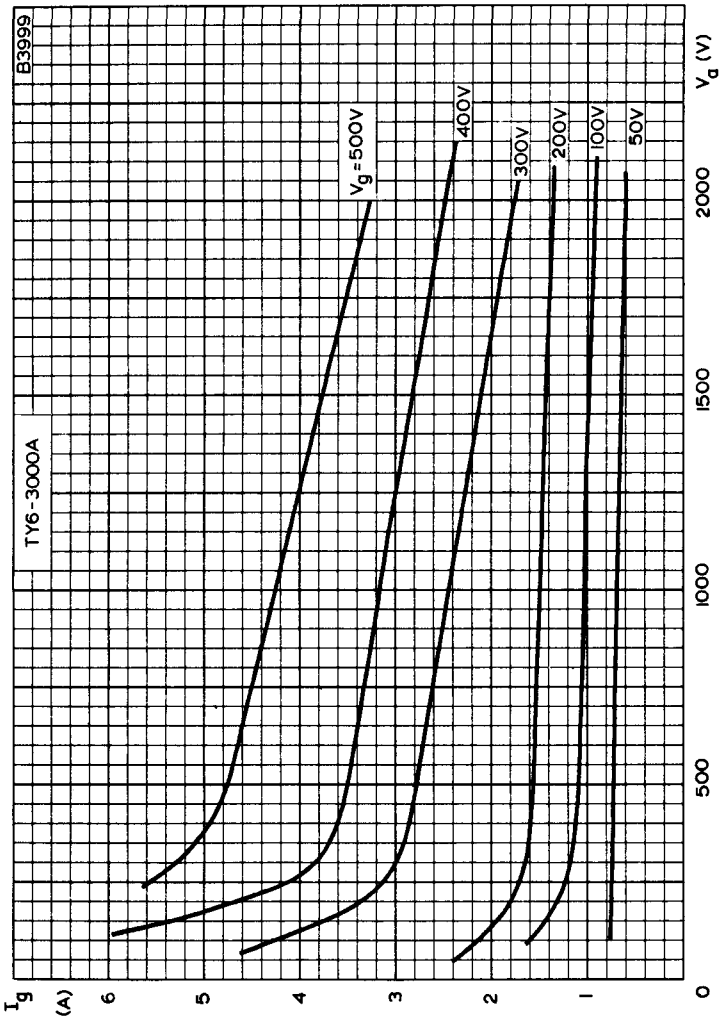

GRID CURRENT PLOTTED AGAINST ANODE VOLTAGE WITH GRID VOLTAGE AS PARAMETER

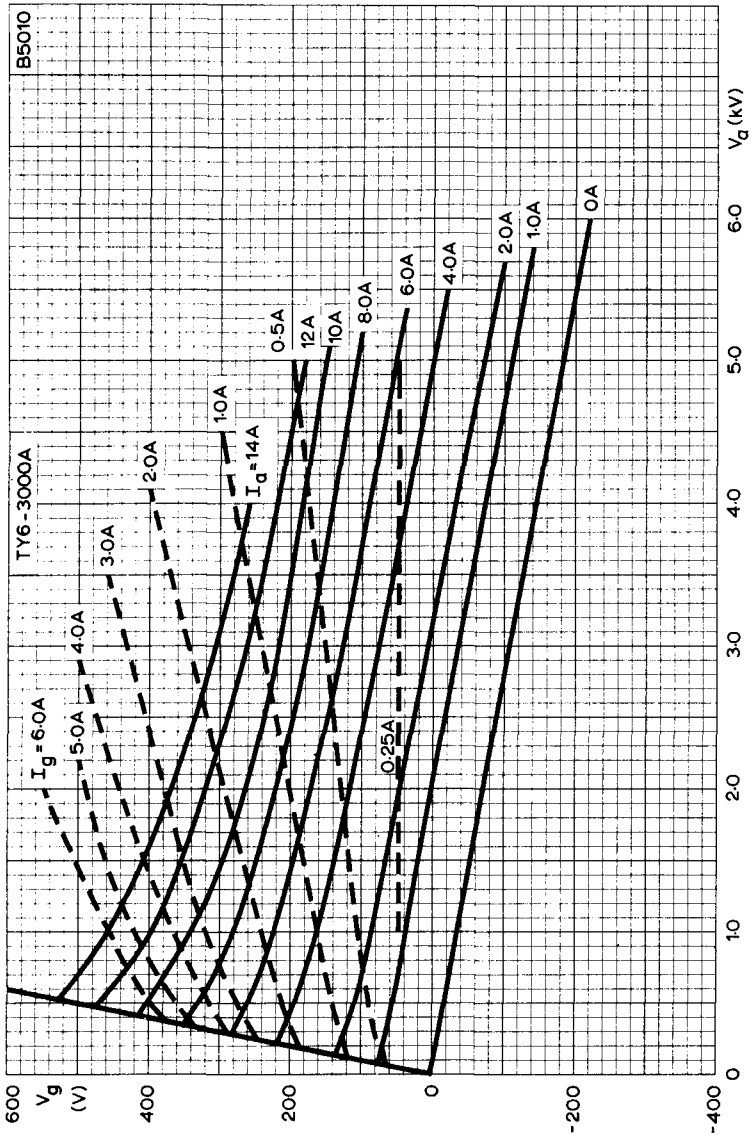

CONSTANT CURRENT CHARACTERISTICS

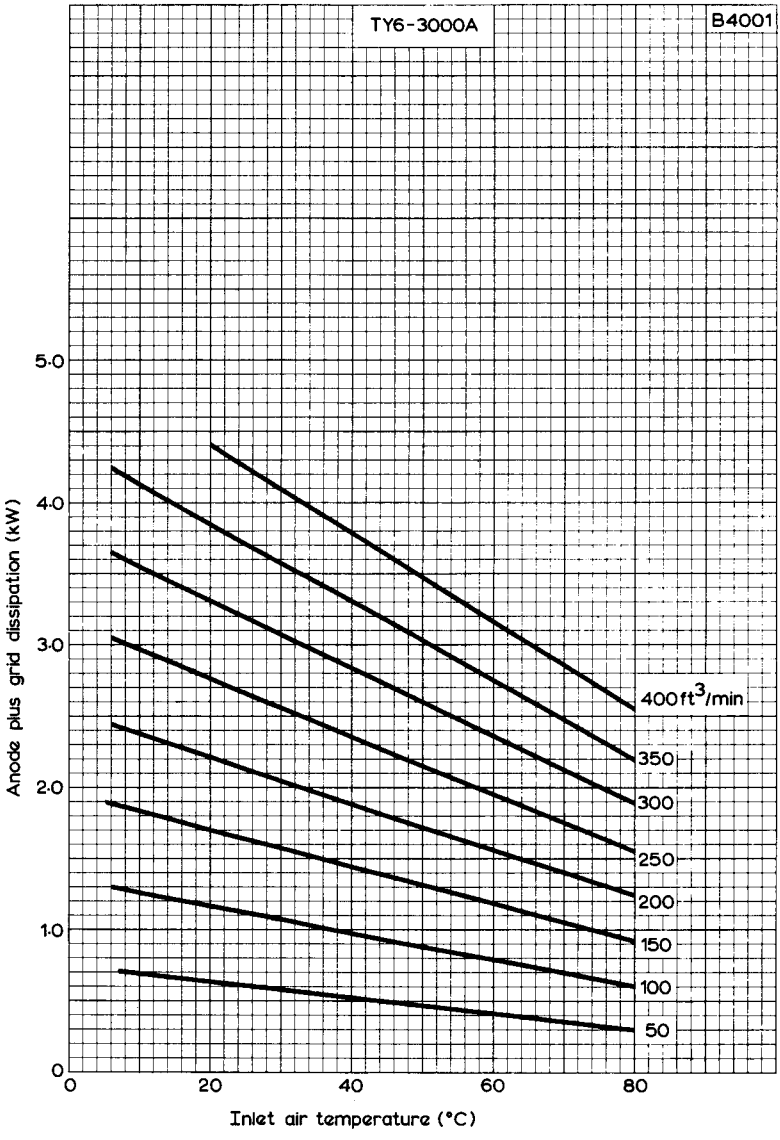

AIR COOLING CHARACTERISTICS

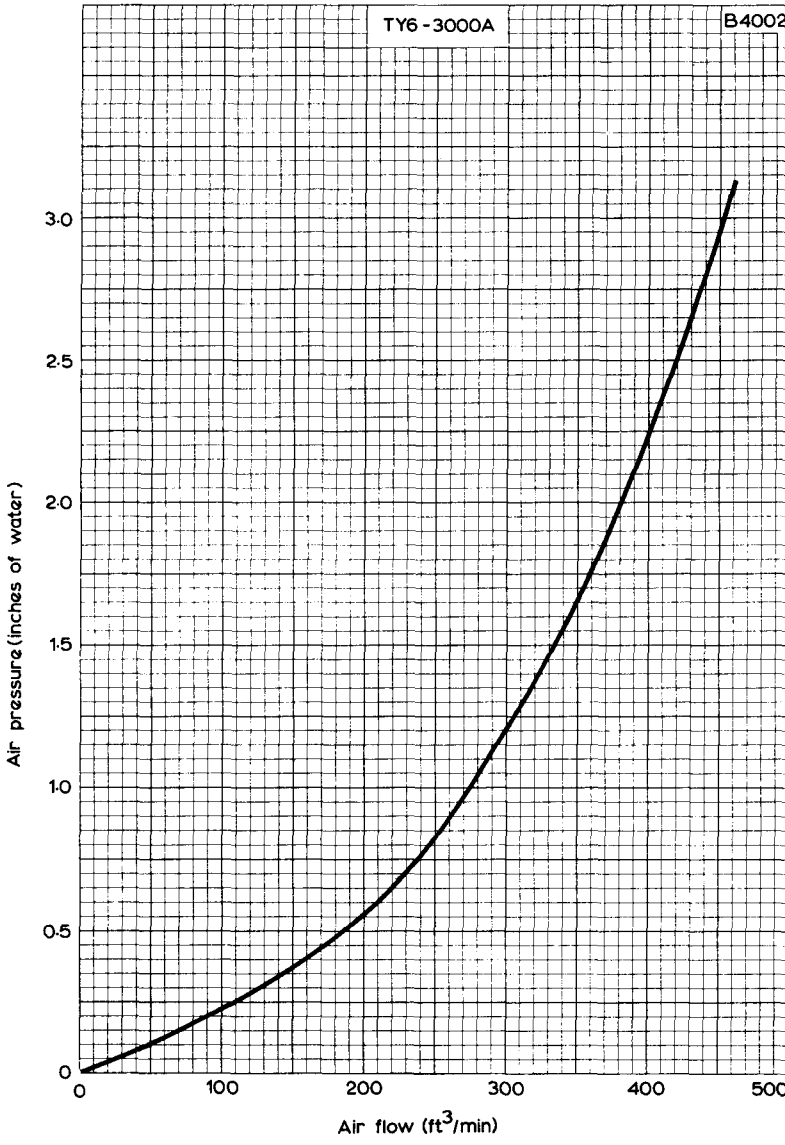

AIR FLOW CHARACTERISTICS