R.F. POWER TRIODE

Application: R.F. industrial oscillator
Power output: 4.1kW continuous rating
Frequency: 50Mc/s at full ratings
Construction: External anode, forced-air cooled

TY6-1250A

PRELIMINARY DATA

This data should be read in conjunction with GENERAL OPERATIONAL RECOMMENDATIONS—TRANSMITTING VALVES which precede this section of the handbook.

FILAMENT Directly heated, thoriated tungsten

$*V_f$	6.3	V
I_f	65	A

*The filament has been designed to accept temporary voltage fluctuations of up to +5% or −10%

MOUNTING POSITION Vertical only, anode up or down

CAPACITANCES

c_{a-g}	7.2	pF
c_{g-f}	13	pF
c_{a-f}	<500	mpF

CHARACTERISTICS (measured at V_a=6kV, I_a=240mA)

g_m	7.0	mA/V
μ	23	

COOLING

Forced air

T_{seals} max.	200	°C
T_{anode} max.	270	°C

An airflow should be directed to anode and seals in order to keep the temperature below the specified limits.

At sea level and at a temperature of 35°C an airflow of 70ft³(2m³) per minute is sufficient for cooling the anode in continuous operation at maximum anode dissipation.

At higher altitudes and/or higher inlet temperatures a correspondingly greater amount of air should be applied.

The filament and grid seals require an airflow of 11ft³(0.3m³) per minute.

The airflow should be directed on the valve as indicated in Fig. 1. To keep the anode seal, opposite the nozzle, below the maximum temperature a deflection plate as indicated in Fig. 1 should be used. This should be made of a suitable insulating material such as p.t.f.e. This deflection plate can be clipped on the anode or mounted on the valve socket or on the chassis.

TY6-1250A

R.F. POWER TRIODE

CLASS 'C' OSCILLATOR

Anode supply from 3-phase rectifier without smoothing filter continuous operation.

Limiting values (absolute ratings)

f max.	50	Mc/s
V_a max.	7.0	kV
I_k max.	2.0	A
$i_{k(pk)}$ max.	12	A
p_a max.	1.3	kW
$-V_g$ max.	1.25	kV
I_g max.	400	mA
R_{g-f} max.	10	kΩ

Typical operation

f	50	Mc/s
$V_{tr(r.m.s.)}$	5.1	kV
V_a	6.0	kV
I_a	900	mA
I_g	280	mA
p_a	1.3	kW
η_a	76	%
R_{g-f}	2.0	kΩ
R_a	3.3	kΩ
Feedback ratio $\frac{V_{in(pk)}}{V_{a(pk)}}$	0.16	
P_{out}	4.1	kW
$^*P_{load}$	3.3	kW

*0.85 ($P_{out}-P_{drive}$)

CLASS 'C' OSCILLATOR

Anode supply from 3-phase rectifier without smoothing filter, intermittent operation.

Limiting values (absolute ratings)

f max.	50	Mc/s
V_a max.	7.0	kV
p_a max.	2.1	kW
I_k max.	2.3	A
$i_{k(pk)}$ max.	14	A
$-V_g$ max.	1.25	kV
I_g max.	400	mA
R_{g-t} max.	10	kΩ

Typical operation

Duty cycle t_{on}	see page C4	
f	50	Mc/s
$V_{tr(r.m.s.)}$	5.1	kV
V_a	6.0	kV
I_a	1.33	A
I_g	380	mA
p_a	2.1	kW
η_a	74	%
R_{g-t}	1.45	kΩ
R_a	2.2	kΩ
Feedback ratio $\frac{V_{in(pk)}}{V_{a(pk)}}$	0.17	
P_{out}	5.9	kW
*P_{load}	4.75	kW

*0.85 ($P_{out}-P_{drive}$)

WEIGHT

Valve only	1 lb 13oz	800 g
Shipping weight	3 lb 10oz	1.6 kg

ACCESSORIES

Socket B8.700.51

TY6-1250A

R.F. POWER TRIODE

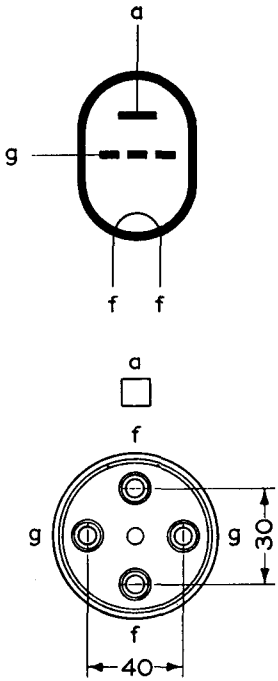

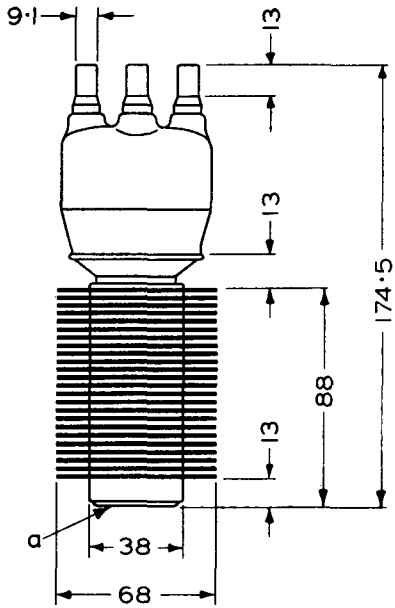

All dimensions in mm

7452

TY6-1250A

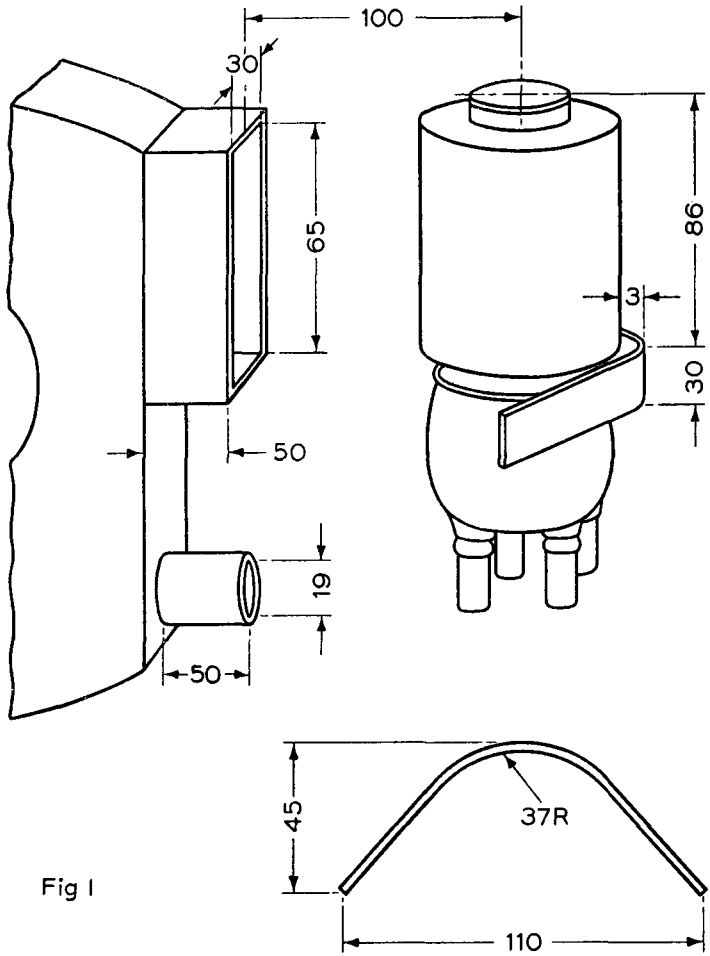

Fig I

All dimensions in mm

7461

FIG. 1. COOLING ARRANGEMENT

TY6-1250A

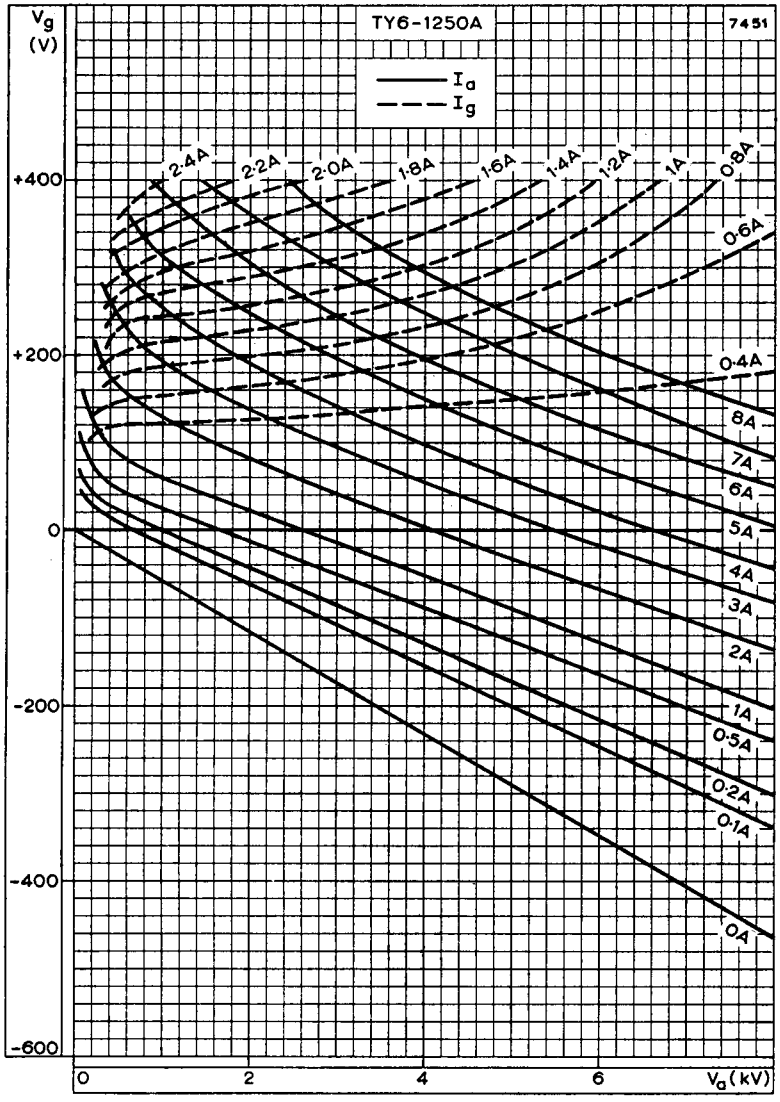

CONSTANT CURRENT CURVES

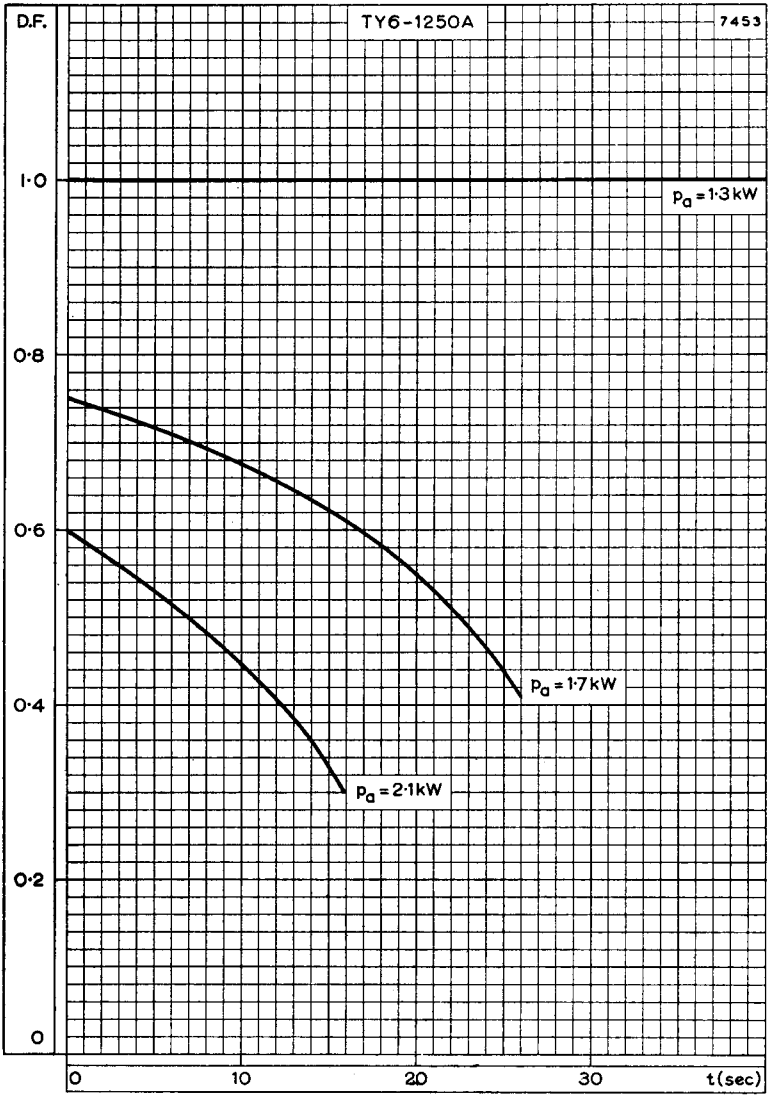

DUTY FACTOR PLOTTED AGAINST TIME FOR INTERMITTENT OPERATION