TV 9140 TRAVELING WAVE TUBE

The TV 9140 is a traveling wave pulse amplifier which delivers 6 to 10 kilowatts peak output between 2. 8 and 3. 15 gigahertz, under saturation conditions.

It is a broadband driver for multimegawatt amplifiers. The tube includes a control grid to permit low voltage beam switching.

The tube offers the following main features :

- Periodic permanent magnet focusing - Needs no magnet power supply.
- Broadband - High power - Amplifies pulses within its 350 MHz bandwidth without adjustment for change of frequency.
- Control grid. Permits low voltage beam pulsing.
- Forced air cooled - Permits compact equipment design : no heat exchanger or interconnecting hoses required.

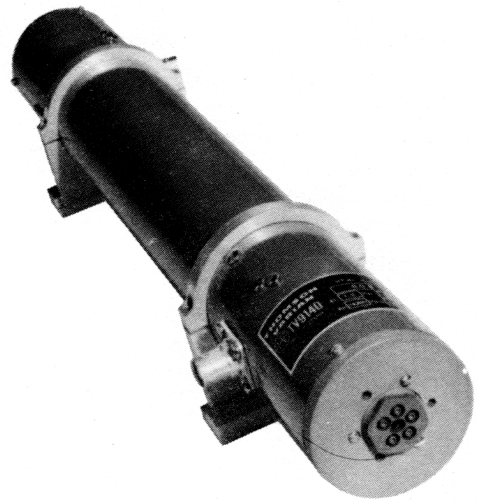

GENERAL CHARACTERISTICS

Electrical

	min.	avg.	max.	
Heater voltage	–	7. 5	–	V
Heater current	1. 75	–	2. 25	A
Frequency	2. 8	–	3. 15	GHz
Beam voltage	13	–	15	kV
Peak beam current	–	–	4	A
Output power	6	–	–	kW
Capacitance grid to all other electrodes	–	–	25	pF

Physical

Dimensions	see outline drawing page 6
Weight, approximate	7 kg
Mounting position	any
RF connectors	UG 571/U
Supply connection	Winchester PM6S
Cooling	Forced air

THOMSON-CSF
GROUPEMENT TUBES ELECTRONIQUES

ABSOLUTE RATINGS

	min.	max.	
Drive power	–	15	W
Beam voltage	–	16	kV
Peak beam current	–	4	A
Grid bias voltage	–100	–300	V
Peak grid voltage, above cathode	–	+500	V
Duty cycle	–	0. 003	
Pulse duration	–	15	µs
Heater warm up time	3	–	mn
Heater voltage	7	8	V
Heater surge current	–	5	A
Load VSWR	–	2. 0 : 1	
Operating temperature	–20	+55	°C

TYPICAL OPERATION

Frequency	3	GHz
Heater voltage	7. 5	V
Heater current	2. 0	A
Peak input power	5	W
Peak output power	7	kW
Average output power	15	W
Beam voltage	14. 5	kV
Peak beam current	3	A
Grid bias voltage	–150	V
Peak grid voltage, above cathode	+326	V
Duty cycle	0. 002	
Pulse duration	10	µs
Load VSWR	1. 2 : 1	

OPERATING INSTRUCTIONS

These operating instructions provide basic information for installing and operating the TV 9140 pulsed traveling wave tube amplifier. Supplementary information is given in the Test Performance sheet which contains test results at specific frequencies for individual tube.

1 - PROTECTIVE MEASURES

This tube should be used in equipment which provides protection as described below. In addition, installation and operating precautions should be observed, and ratings should not be exceeded.

High voltage

Voltages required for operation of this tube are extremely dangerous ; equipment should be designed with protective interlock circuits to make physical contact with these voltages impossible.

Microwave radiations

Precautions should be taken to prevent exposure of personnel to the strong microwave fields generated by this tube. Microwave radiation due to leakage at the coaxial connectors should be prevented by making tight R.F. input and output connections.

Heater voltage

Specified heater voltage should be applied for at least 3 minutes before applying beam voltage. Heater surge current should never exceed 5 amperes.

Beam voltage

Interlocks should be provided to prevent the application of beam voltage before the grid bias voltage is applied. An overvoltage relay should be provided to limit the beam voltage to 16 kV dc.

Grid power supply

The grid power supply should present at low impedance to the grid circuit. This will prevent runaway conditions and oscillations in the grid power supply wiring due to the possibility of the grid presenting a negative resistance to the gating circuit.

The grid gate generator should have a protective circuitry to prevent the pulse duration from exceeding 15 μs. In addition, suitable protective device (e.g. a spark gap) should be provided to limit the potential difference between grid and cathode to a maximum of 500 volts.

Beam current

A peak current sensing device should be employed which will limit the peak beam current to 4 A maximum, and an overcurrent relay to remove the high voltage and gate pulse if the average beam current exceeds 12 mA.

2 - COOLING

The tube is forced air cooled. At least 0. 45 m^3/mn of cooling air should be provided for adequate cooling at sea level and normal room temperature. This air flow must be supplied against a back pressure of about 4 g/cm^2.

3 - MOUNTING

The tube can be mounted in any position. See the outline drawing for details.

Attached the forced air cooling ducts to the tube. The air duct should have an inside diameter of about 5. 6 cm and should connect to the collector end of the tube.

THOMSON-CSF
GROUPEMENT TUBES ELECTRONIQUES

Electrical connections

Electrical connections to the tube should be made as shown in Fig. 1. This diagram shows the tube body and the positive side of the beam power supply at ground potential. With this arrangement, the heater and grid power supply must be insulated to withstand the full beam voltage.

The power connector on the tube is a Winchester PM6S receptacle which mates with a Winchester plug, type PM6P. The pin connections are shown in Fig. 1.

The R.F. input and output connectors mates with a 50 - Ohms coaxial, type "C", UG-573A/U plug or equivalent.

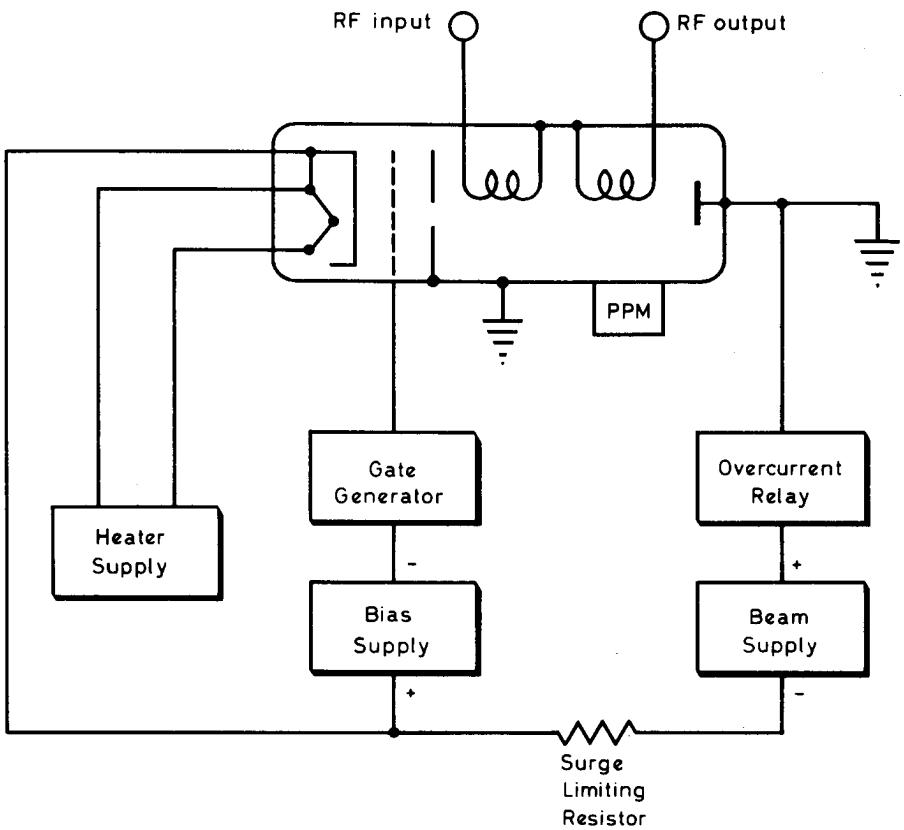

SUPPLY CONNECTOR

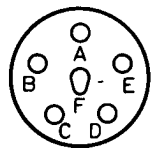

CONNECTIONS	
A-C	Cathode-heater
B	No connection
D	Heater
E	No connection
F	Grid

FIGURE 1

4 - OPERATION

Check the following conditions before applying voltages to the tube :

- Winchester socket and R.F.connectors are connected properly to their mating parts and tube body grounded.
- Air duct is attached securely and cooling air is flowing.
- All protective circuits are operating correctly.
- VSWR of load is no more than 2. 0 : 1 throughout the operating frequency range.

5 - APPLICATIONS OF VOLTAGES

Voltages should be applied in the following order :

- Apply heater voltage and allow at least 3 minutes for cathode warm-up.
- Apply grid bias, beam and gate voltages specified on the Test Performance Sheet may be adjusted (within their maximum ratings) to obtain the desired peak beam current.
- Apply R.F. drive power and adjust to obtain desired R.F. output.

Removal of voltages

Grid bias voltage must not be removed until both the gate and beam voltages have reached zero. Grid bias and heater voltages may be removed simultaneously.

6 - TRANSPORTATION AND STORAGE

Use the packing case for transportation and storage of the tube when it is not in service.

THOMSON-CSF
GROUPEMENT TUBES ELECTRONIQUES

OUTLINE DRAWING

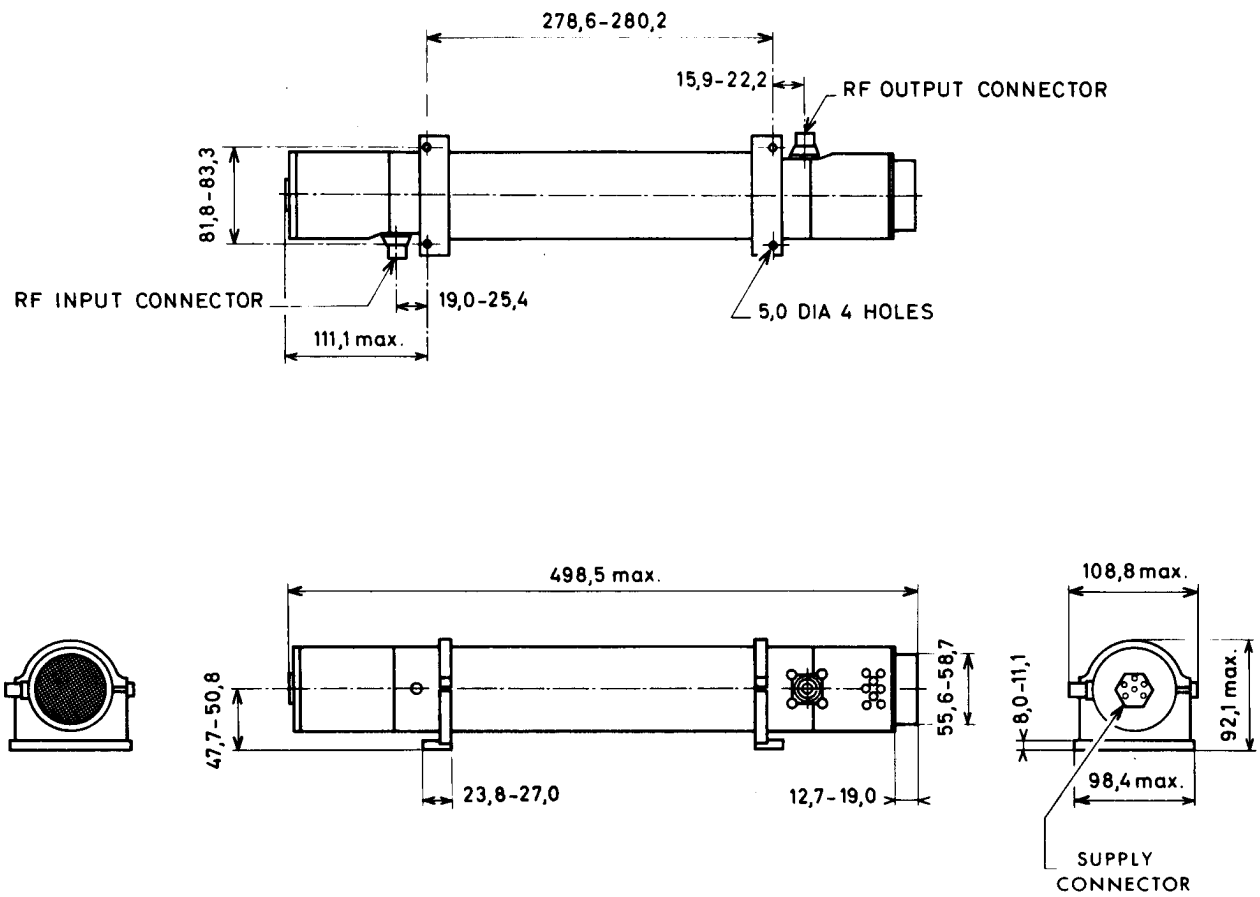

Dimensions in mm.