TV 3304 A CRYSTAL PROTECTOR

The TV 3304A is a S-Band crystal protector designed to operate from 2825 to 3125 MHz with a maximum power level of 30 kW.
It features wide band and fixed tuning.

The TV 3304A is inserted in the waveguide section by the way to the receiver, protecting against high energy level by a gas discharge, taking place inside the tube. The gas discharge is induced by an electrode : the ignitor. When the tube is not ionized, the echo propagating towards the receiver is very slightly attenuated.

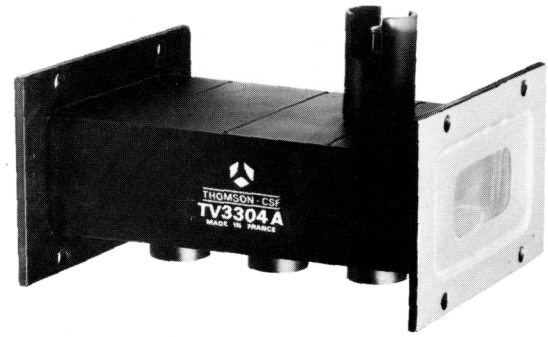

GENERAL CHARACTERISTICS

Mechanical

Operating position	any
Approximate weight	1 kg
Dimensions	see drawing

Electrical

	min.	max.	
Frequency range	2825	3125	MHz
VSWR at low level	–	1.4 : 1	
Insertion loss	–	0.7	dB
Ignitor interaction for a 200 µA current	–	0.3	dB
Voltage drop between ignitor and tube body	– 250	– 400	V
Recovery time	–	15	µs
Spike leakage energy	–	0.3	erg
Flat leakage energy	–	0.4	erg

ABSOLUTE RATINGS
(non simultaneous)

	min.	max.	
Altitude	–	3000	m
Ignitor voltage (open circuit)	– 600	–	V
Transmitted power	–	30	kW
Duty cycle	–	0.001	

Very important

Tighten the four locking screws progressively and uniformly, so as to avoid any deformation of the flange and the TR-window frame. Electrical contact must be via the metallic joint only, the flange and the window frame not coming into contact at the end of tightening. To avoid imposing any mechanical stress on the tube window, it is recommended that the locking screws be tightened by hand, followed by only one quarter-turn with a wrench.

THOMSON-CSF
GROUPEMENT TUBES ELECTRONIQUES

OUTLINE DRAWING

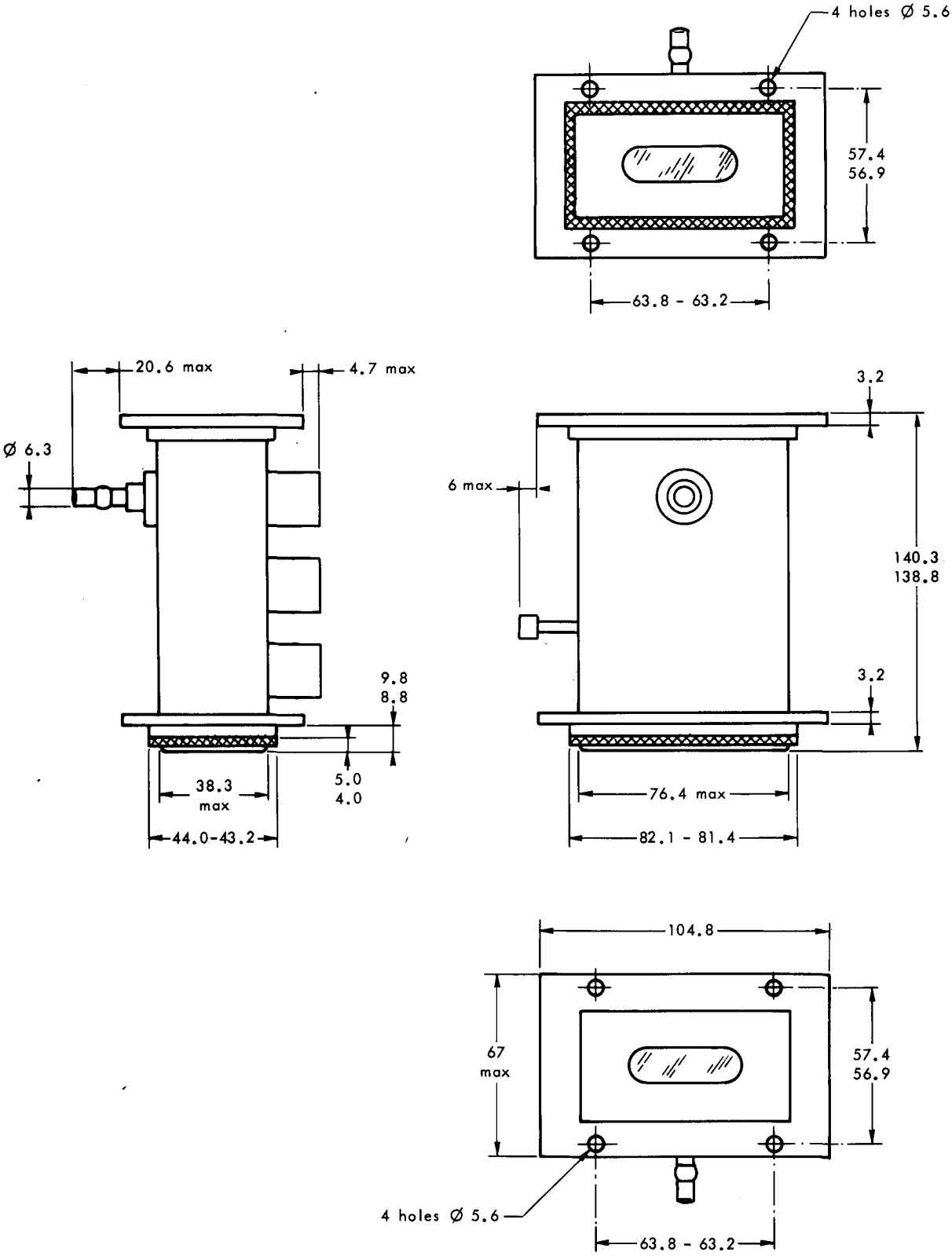

Dimensions in mm.