TV 1501 MAGNETRON

The TV 1501 mechanically-tuned magnetron is a high power pulsed oscillator, capable of more than 400 kW peak power output between 5.45 and 5.60 cm.

The tube includes an integral permanent magnet, and fins for forced air cooling.

RF output window mates with C band waveguide.

These magnetrons are extremely reliable for use in electromagnetic detection systems (radar).

The TV 1501 is mechanically tunable at any center frequency between 5350 and 5500 MHz.

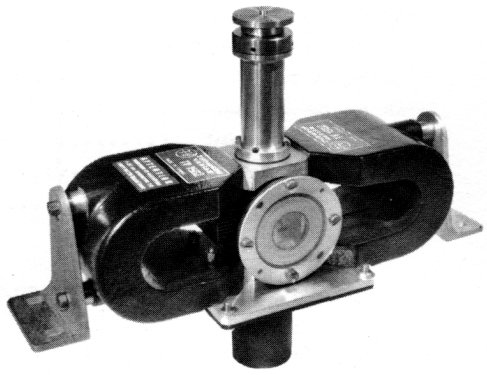

GENERAL CHARACTERISTICS (1)

Electrical

Cathode	unipotential, oxide coated		
Heater	indirect		
Heater voltage		9.5	V
Heater current		4.5 to 6.5	A
Warm-up time	min.	3	mn

(1) Characteristics and operating values are given for information only and are not to be interpreted as specification limits. Performance limits are given on the tube Specification Sheet.

Mechanical

Mounting position	any		
Cooling	forced air		
Anode temperature	max.	120	°C
Cathode temperature	max.	270	°C
RF Output, waveguide	RG 49/U		
flange	modified UG 148 B/U		
Tuner torque	max.	19.1	N.cm
RF output pressurization	max.	1	bar
Weight, tube only		17	kg (approx.)
tube and packing case		25	kg
Dimensions	see drawing		

THOMSON-CSF
GROUPEMENT TUBES ELECTRONIQUES

MAXIMUM RATINGS

(non simultaneous)

Heater voltage		10.5	V
Pulse width	max.	2	µs
Duty cycle		0.0012	
Average input power		480	W
Peak input power		960	kW
Peak anode voltage		30	kV
Peak anode current		32	A
Frequency range		5350 to 5500	MHz
Frequency pulling		15	MHz

TYPICAL OPERATION

Starting heater voltage		9.5	V
Standby heater voltage		6.5	V
Pulse width		1 ± 0.1	µs
Anode voltage rise time		0.2	µs
Duty cycle		0.0005	
Peak anode voltage		26 to 30	kV
Average anode current		15	mA
Average RF power	min.	200	W
Operating frequency		5350 - 5500	MHz

OPERATING INSTRUCTIONS

The Data Sheet contains maximum ratings, operational data, and an outline drawing to be used with these instructions which provide the basic information for installing and operating the tube. For additional information, please address inquiries to Thomson-Varian.

Installation

1 - The following installation and operating precautions should be observed :

a) - Use non-magnetic tools for mounting.

b) - Do not stress the output connector and the output window.

c) - Keep the tube at least 30 cm away from all magnetic material.

2 - Connect the power supply to the two plugs of the connector, the red one should be connected to the cathode.

To protect the heater, it is recommended to put in series with it an inductance (a few µH) and a capacitor of about 20 000 pF between cathode and heater.

3 - Gradually increase heater voltage so that the heater surge current never exceed 18 A.

Allow at least 3 minutes for cathode warm-up, before application of anode voltage.

4 - Tune frequency to approximately 5400 MHz.

To lower the frequency turn the tuning mechanism clockwise.

5 - Check the efficiency of the forced air cooling.

6 - Apply the high voltage negative pulses to the cathode. Grounding of the mounting plate will insure adequate grounding of the tube.

In normal operating conditions, pulses must be according to the following characteristics:

- voltage rise time (between 20 and 85%) = 0.18 to 0.25 µs.
- any spike on the pulse front must be cut out.
- the pulse level ripple must not exceed 10% of the peak current average value.
- reverse voltage must not exceed 20% of the applied pulse.

7 - The heater voltage must be reduced according to the input power.

8 - The tube should be tuned only through the specified tuning range (5350 - 5500 MHz).

HEATER VOLTAGE ADJUSTMENT

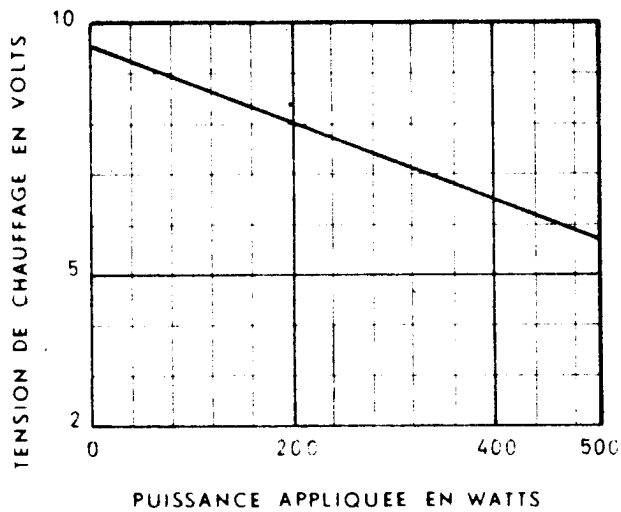

STARTING A NEW TUBE

When a tube is new, or has not been used for a long time, a quick preliminary check should be performed. Small quantity of gas can product arcing when high voltage is applied. Generally arcs are shorter than 2 seconds and high voltage and current may be increased. If instability occurs at any step, as evidenced by arcing of 5 seconds duration or more, and erratic average anode current, the following procedure is to be observed :

a) - Turn the tuning mechanism clockwise, to operate at low frequency (5400 MHz).
b) - Allow 15 minutes for the cathode to warm-up.
c) - Gradually increase high voltage until average anode current instability appears. Slightly reduce the high voltage and operate at this lower level during 3 minutes.
d) - Tune frequency at 5350 MHz.
e) - The tube operating stably, gradually increase high voltage to reach normal operating values (see § c).
f) - The magnetron operating in a very stable way, frequency may be tuned through the specified range (5350 - 5500 MHz).

NOTES

Never exceed absolute maximum ratings.

Heater voltage adjustment is very important when operating a new tube.

The load normally used should have a VSWR $<$ 1.5:1. To avoid difficulties of starting a new tube it is recommended to operate at the lowest possible standing wave ratio.

THOMSON-CSF
GROUPEMENT TUBES ELECTRONIQUES

UG 148 B/U FLANGE

(modified)

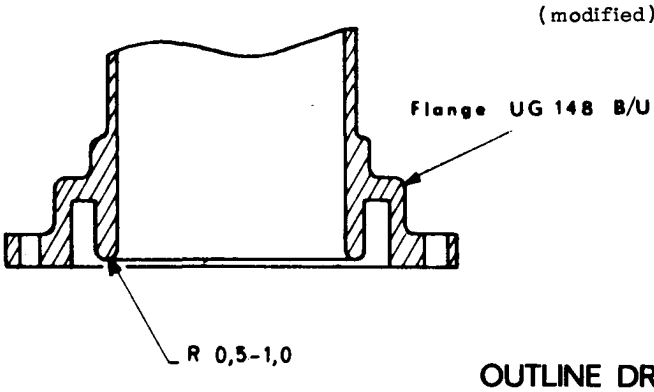

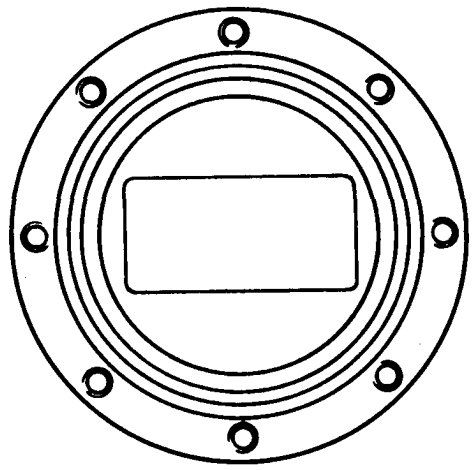

OUTLINE DRAWING

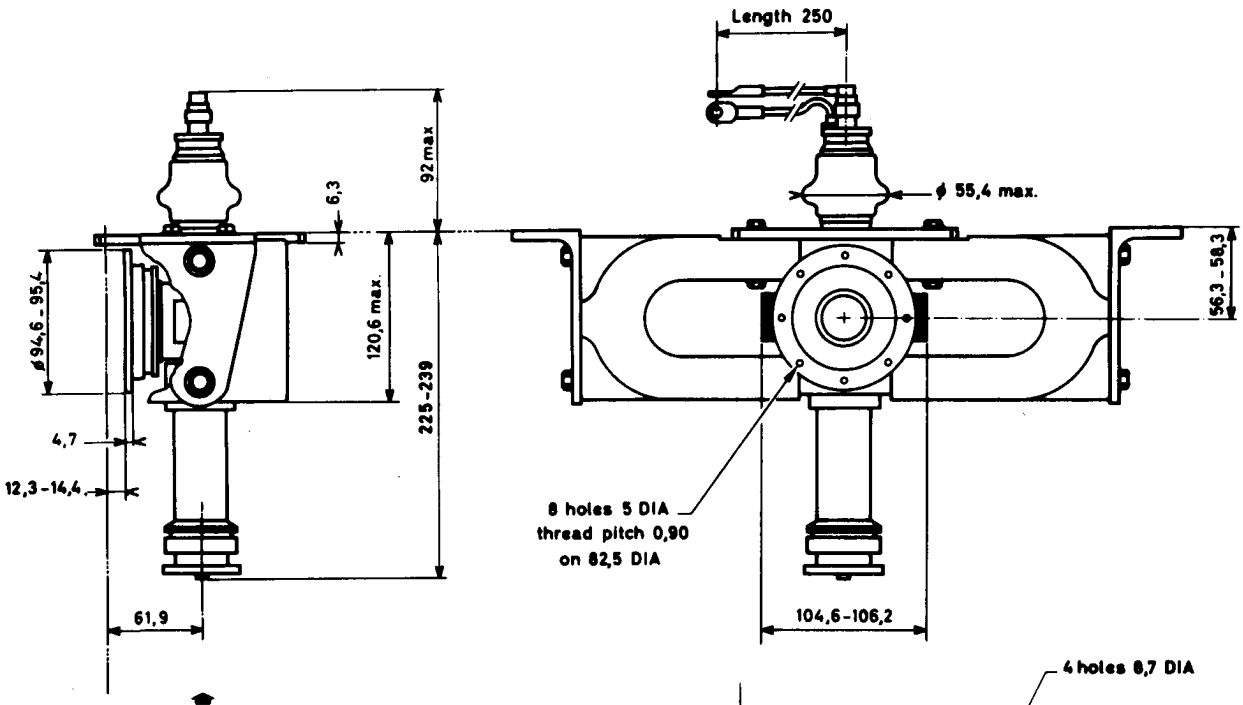

A

MECANISM
COUPLING FLANGE

VIEW AA

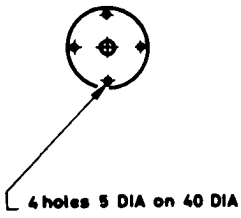

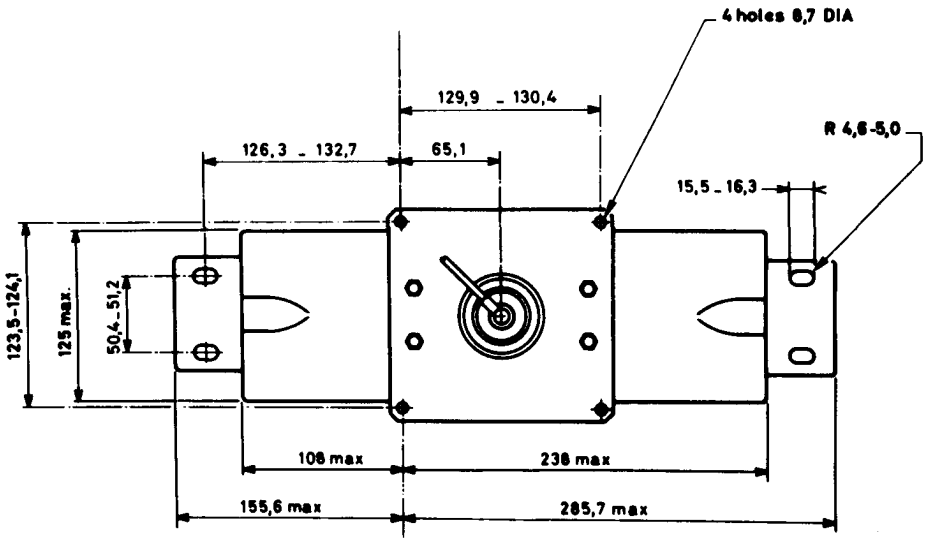

Dimensions in mm