TME 1507S
RUGGEDIZED DOUBLE-ENDED STORAGE TUBE
HIGH RESOLUTION POTTED AND SHIELDED TUBE WITH INTEGRAL COILS FOR AIRBORNE EQUIPMENT

- 1 1/2" DIAMETER DUAL GUN SCAN CONVERTER TUBE
- ELECTROMAGNETIC FOCUS AND DEFLECTION
- NON-DESTRUCTIVE READOUT
- ADJUSTABLE DECAY
- SIMULTANEOUS WRITING AND READING WITHOUT CROSS-TALK
- FAST ERASING BY THE READING GUN
- LIMITING RESOLUTION : 2000 TV lines per diameter

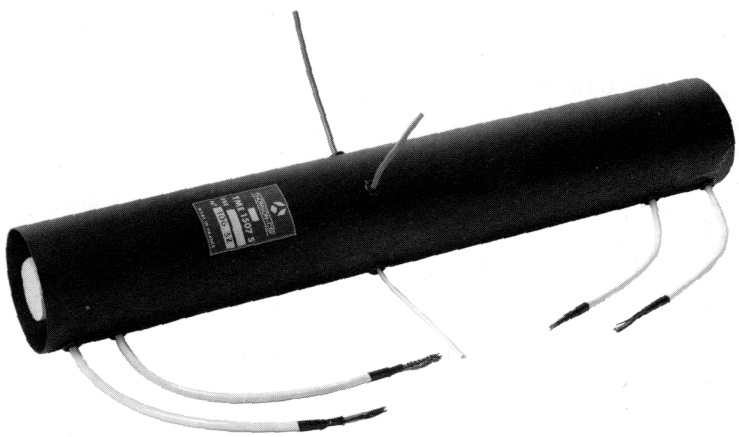

The TME 1507S is a complete assembly including :

- a high resolution double-ended storage tube operating at low voltages ;
- two special printed circuit, low impedance coils TH 7205 ;
- a shield ensuring magnetic protection and mechanical fixture.

The special design of the TME 1507S allows to obtain a compact assembly (length 480 mm, outer diameter 76 mm) intended for airborne scan converter operating under severe environmental conditions such as encountered in military and space applications (see "Environmental Performances" page 2).

Due to the double-ended storage tube properties, the TME 1507S enables numerous operating combinations :

- continuous readout for a few minutes without degradation of the stored information ;
- simultaneous writing and reading without cross-talk due to effective isolation between writing and reading sections ;
- complete or selective erasure by either writing or reading gun ;
- possibility of erasing during line retrace by either writing or reading gun in order to obtain gradual erasure ;
- very fast erasing by reading gun due to patented gun design ;
- possibility of writing by either writing or reading gun.

ENVIRONMENTAL PERFORMANCES

The TME 1507S is designed to withstand the following operational and non-operational environmental tests.

Rejection criteria

After completion of the environmental tests, the tube meets the characteristics specified under typical operation data.

Operational tests

1 - **Vibration** - Specification NF - C20 - 616 (CEI - 68 - 2 - 6)
The tube shall be mechanically connected to the vibration generator by means of a fixture. It shall be vibrated in 3 mutually perpendicular axis in turn.
The tube is subjected to sinusoidal vibration from 5 to 60 Hz (with constant amplitude of 0. 125 mm) then from 60 Hz to 500 Hz (with constant acceleration of 2g).
Cycle duration : 15 minutes.
Number of cycles per direction : 5.

2 - **Dry heat** - Specification NF - C20 - 602 (CEI - 68 - 2. 2 - Bd)
Temperature : + 85 °C
Duration : 16 hours

3 - **Cold** - Specification NF - C20 - 601 (CEI - 68 - 2. 1 - Ad)
Temperature : –55 °C
Duration : 16 hours

4 - **Low air pressure** - Specification NF - C20 - 606 (CEI - 68 - 2 - 13)
Pressure : 20 mbar
Temperature : – 55 °C
Duration : 12 hours

5 - **Accelerated damp heat** - Specification NF - C20 - 604 (CEI - 68 - 2 - 4)
Temperature : + 55 °C
Relative humidity > 95 %
Duration : 1 cycle of 24 hours

Non-operational tests

1 - **Bump** - Specification NF - C20 - 624 (CEI - 68 - 2 - 29)
Peak acceleration : 25 g
Pulse duration : 6 ms (half-sine wave)
Number of bumps : 1000 in each direction
Rate : 1 to 3 bumps per second

2 - **Change of temperature** - Specification NF - C20 - 605 (CEI - 68 - 2 - 14)
One-chamber method
Low temperature : – 55 °C
High temperature : + 85 °C
Temperature change : 1 °C per minute
Exposure duration each extremal temperature : 3 hours
Number of cycles : 3

3 - **Salt mist** - Specification NF - C20 - 611 (CEI - 68 - 2 - 11)
Temperature : + 35 °C
Duration : 96 hours

TYPICAL PERFORMANCES

Peak output current	0. 3 μA
Writing time :	
- writing over the whole target area	33 - 40 ms (1 TV frame)
- writing of one target diameter	50 μs
Erasing time :	
- erasing of the whole written image to residual less than 5 % (by reading gun)	33 - 40 ms (1 TV frame)
- selective erasing of one target diameter (by writing or reading gun)	300 μs
Reading time (for continuous readout),	10 mn
Decay by line retrace erasure (by either writing or reading gun)	adjustable from 0. 1 s to 10 mn
Retention time (without readout)	several days
Resolution by orthogonal writing and reading :	
- at 50 % modulation	1200 TV lines/dia
- limiting	2000 TV lines/dia

GENERAL CHARACTERISTICS

Electrical

– TUBE

Heater voltage	6. 3 V
Heater current (for each gun)	0. 15 A
Output capacitances :	
- target to all other electrodes	25 pF
- grid g5 to all other electrodes	15 pF
Input capacitance :	
- grid g1' to all other electrodes	15 pF
Focusing method (both gun)	electromagnetic
Deflection method (both gun)	electromagnetic

– COILS

The same TH 7205 coils assembly is used on both sides (writing and reading)

Focusing coil :	
- resistance	85 Ω
Alignment coil :	
- resistance	300 Ω
Deflection yoke (vertical or horizontal) :	
- resistance	6 Ω
- inductance	125 μH

Mechanical

Overall length, max.	480 mm
Outer diameter, max.	76 mm
Weight, approx.	3. 5 kg

All electrode and coil connections are made through flying leads as indicated in the drawing.

MAXIMUM RATINGS
(absolute values)

TUBE

Unless otherwise stated, voltages are given with respect to reading cathode potential.

Reading gun		
Cathode k voltage	0	V
Peak heater-cathode voltage :		
- heater negative w.r.t.k.	125	V
- heater positive w.r.t.k.	125	V
Grid g1 voltage :		
- negative bias value	180	V
- positive bias value	0	V
Grid g2 voltage	600	V
Grid g3 voltage	600	V
Grid g4 voltage	600	V
Grid g5 voltage	700	V

Writing gun		
Cathode k' voltage	–200	V
Peak heater-cathode voltage :		
- heater negative w.r.t.k'	125	V
- heater positive w.r.t.k'	125	V
Grid g1' voltage (w.r.t.k') :		
- negative bias value	180	V
- positive bias value	0	V
Grid g2' voltage	400	V
Grid g4' voltage	400	V
Grid g5' voltage	500	V

Target voltage . . . . . 700 V

COILS

Voltage	250	V
Voltage between coils and ground	250	V
Focusing coil :		
- current	0. 3	A
Alignement coil (each coil) :		
- current	0. 1	A
Deflection coil (each horizontal or vertical yoke) :		
- D.C. current	0. 5	A
- peak current	1	A

TYPICAL OPERATING CONDITIONS

Unless otherwise stated, voltages are given with respect to reading cathode potential.

Reading gun		
Heater :		
- voltage	6. 3 ± 10 %	V
- current	0. 15	A
Cathode k voltage	0	V
Grid g1 (Wehnelt) voltage (for cut-off)	–50 to –100	V
Grid g2 (accelerator) voltage	+ 450	V
Grid g3 (erasing) voltage :		
normal	+ 450	V
fast	0 to –30	V
Grid g4 (focus) voltage	+ 450	V
Grid g5 (decelerator, collector) voltage	+ 750	V

Writing gun		
Heater :		
- voltage	6. 3 ± 10 %	V
- current	0. 15	A
Cathode k' voltage	– 150	V
Grid g1' (Wehnelt) voltage w.r.t. k' (for cut-off)	–50 to –100	V
Grid g2' (accelerator) voltage	+ 300	V
Grid g4' (focus) voltage	+ 300	V
Grid g5' (decelerator)	+ 400	V

Target voltage . . . . . + 5 V

For erasing which can be performed by either writing or reading gun it is necessary to establish a difference of potential of + 15 V between target and the cathode of the operating gun. This can be done

- either by switching the target voltage to + 15 V (erasing by reading gun)
  or to – 135 V (erasing by writing gun)
- or by maintaining target voltage at + 5 V and switching the cathode voltage V_k = – 10 V (erasing by reading gun)
  $V_{k'}$ = – 10 V (erasing by writing gun)

COILS

Focusing coil :

- current . . . . . 0. 075 A

Alignment coil (each coil) :

- current . . . . . adjustable from – 0. 015 to + 0. 015 A

Deflection coil (each horizontal or vertical yoke) :

- peak to peak current per target diameter . . . . . 0. 800 A

PHYSICAL DESCRIPTION AND OPERATING PRINCIPLE*

The main components of the tube are 2 electron guns (writing and reading) located on each side of a storage target assembly (Fig. 1).

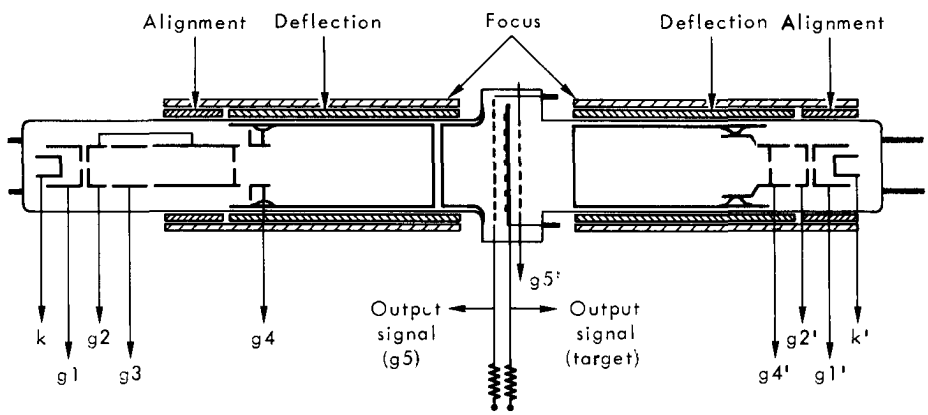

Figure 1

The electron guns employ electromagnetic focus and deflection. The reading gun includes an additional erasing electrode which enables 2 erasing modes (normal or fast) depending on low or high beam current.

The target is of the membrane type,a schematic view of which is given in Figure 2.

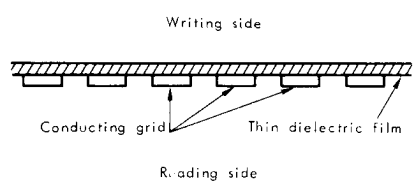

Fig. 2

The principle of operation is the charge or discharge of the storage surface according to the velocity of the primary electron beam through secondary emission of the storage surface.

The structure of the target enables coplanar control mechanism on the reading side when charges have been deposited on either side i.e. by the writing or the reading gun.

The detailed mechanism of the different operations is illustrated in the Figure 3.

WRITING (Fig. 3a)

We assume that, after a previous erasing, the dielectric surface facing the reading side is at –10 V (see erasing) and that the writing beam scans the target with an intensity modulated by the signal applied to g1'.

* Detailed considerations about "Recording Storage Tubes" principles and operations are given in the Technical Information TEV 6013 which we ask the user to refer to.

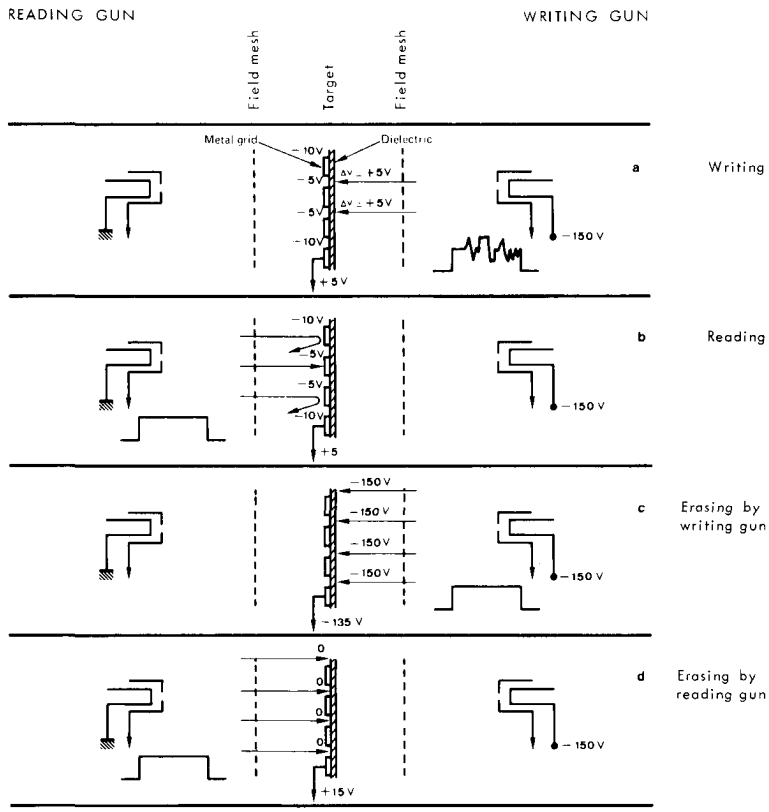

Fig. 3

Considering that the potential difference between the target and the writing cathode is sufficiently high (about 150 V) to get a coefficient $\delta > 1$, positive charges are deposited which increase the potential of the written point by + 5 V for example, on the writing side. By capacitive coupling, the potential of the corresponding point on the reading side will increase by a value of about 5 V and thereby its potential is shifted from −10 V to −5 V.

READING (Fig. 3b)

The reading is performed by scanning the target by the unmodulated reading beam. Depending on the written charge pattern the surface storage voltage varies between 0 and −10 V and output signal varies in exact correspondance. The most negative areas of the dielectric can completely cut-off the electron beam while various gray shades can be obtained in areas where the dielectric is less negative. Since the storage surface voltages are negative with respect to the read cathode voltage, the reading beam has no adverse effect on the pattern and the readout is non-destructive.

ERASING

This can be done by using either the writing beam (Fig. 3c) or the reading beam (Fig. 3d).

In the first case, the target is at −135 V ; the writing electrons landing on the dielectric (writing side) with an energy of 15 eV and giving rise to secondary emission ratio $\delta < 1$, the dielectric is then brought, after bombardment, to an equilibrium potential of −150 V. After switching target voltage back to + 5 V, dielectric surface in then brought to a potential of −10 V.

In the second case, the target is shifted to + 15 V. The capacitive coupling and the low energy electron beam causes the dielectric to be charged down to 0 V through secondary emission ratio $\delta < 1$. After switching target voltage back to + 5 V dielectric surface is then brought to a potential of −10 V.

OTHER OPERATING MODES

Only the major operations are described above since this tube can perform other operations corresponding to any desired application.

For example, only the writing mode achieved by the writing gun has been described. It is obvious that this operation may be achieved through the reading gun by switching, for example, of the target voltage.

It is also possible to conceive, for a radar application, a gradual variable erasure by the writing gun and automatic switching in writing mode just as the echoes begin to appear (THOMSON-CSF patent).

OUTPUT SIGNAL (Fig. 4)

The output signal can be picked-up through either the target or the reading gun grid g5 but these signals are different from each other as shown in the Figures 4a and 4b.

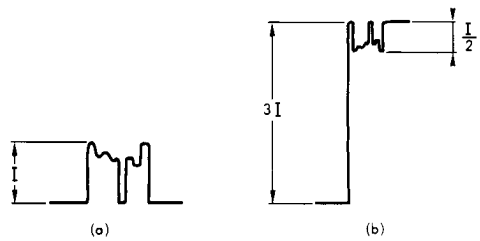

(a) output signal from target
(b) output signal from grid g5

Fig. 4

As compared to the target signal, the grid g5 signal is of reversed polarity and is less convenient since it presents a pedestal level (about 3 times I) and has only about half dynamic amplitude $\frac{I}{2}$

According to the above considerations, it is preferable to use the target as collector except when the crosstalk reaches an uncomfortable level.

OUTLINE DRAWING

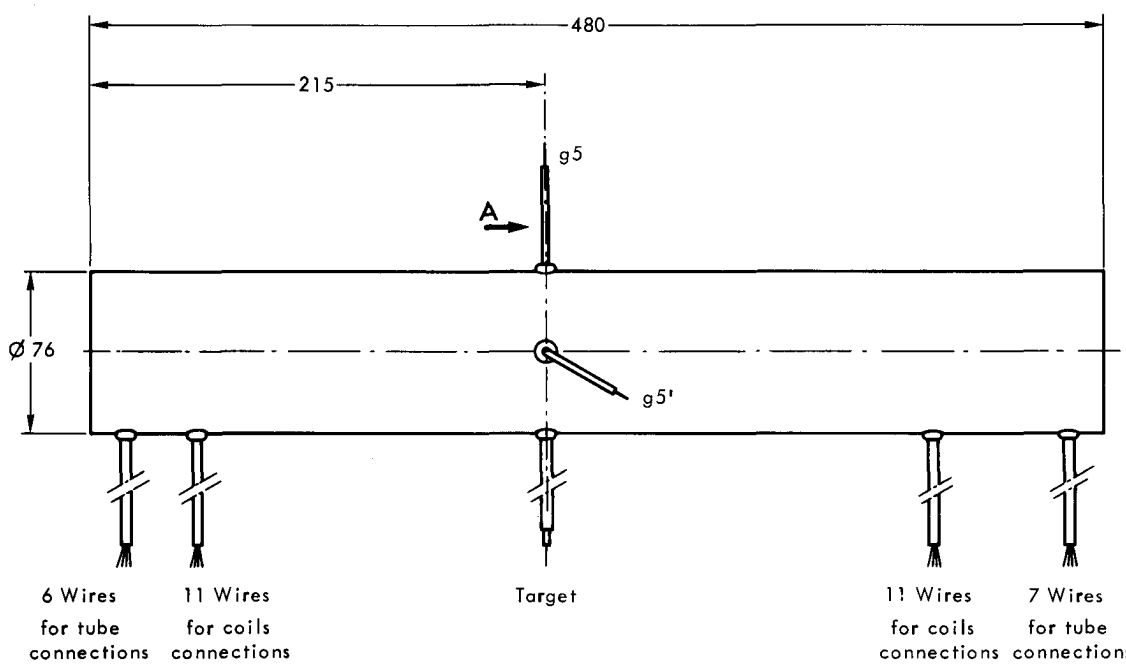

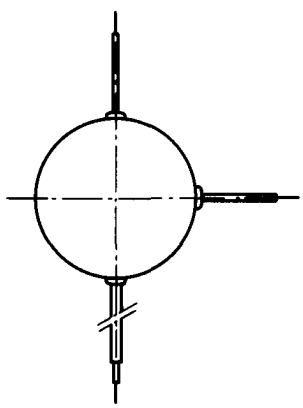

View on A

WRITE

Tube connections		Coils connections	
h'	black	Line scanning	red black
h'	black	Field scanning	green white
k'	yellow	Focusing	orange (-) brown (+)
g1'	green	Alignment 1	blue purple
g2'	blue	Alignment 2	yellow black/white
g4'	brown	Ground	grey

READ

Tube connections		Coils connections	
h	black	Line scanning	red black
h	black	Field scanning	green white
k	yellow	Focusing	orange (+) brown (-)
g1	green	Alignment 1	blue purple
g2	blue	Alignment 2	Yellow black/white
g3	red	Ground	grey
g4	brown		

Dimensions in mm.