TME 1348

FULLY ELECTROSTATIC RECORDING STORAGE TUBE

- SINGLE ENDED STORAGE TUBE
- NON DESTRUCTIVE READ OUT
- FAST WRITING AND ERASING

The TME 1348 is a low cost, single-ended, non destructive read out storage tube capable of storing and reading-out information in the form of electrical signals. Continuous read-out can be achieved for a few minutes without degradation of the stored-information.

This tube features fast writing and erasing, large storage and integration capability and selective erasure possibility. When gradual erasure of the stored information is necessary, it is possible to erase during line or image retrace in order to obtain the desired decay.

These characteristics make it particularly suitable for numerous applications such as : slow scan T.V., data recording and storage, scan conversion, integration of low level video signals. . . . .
In addition, the tube is specially designed for applications where power, weight and volume are all of prime consideration.

The scanning electron beam is focused by a separate electrode operating at an appropriate potential. The deflection is ensured by two crossed pairs of deflection plates. These characteristics allow for suppressing the focus and deflection coils.

TYPICAL PERFORMANCES

Peak output current	0. 2	µA
Writing time :		
writing over the whole target area	33 to 40	ms (1 T.V. frame)
writing of one target diameter	50	µs
Erasing time :		
erasing of the whole written image to residual less than 10 %	33 to 40	ms (1 T.V. frame)
Storage time :		
several days without reading		
Reading time :		
for continuous read-out	10 to 15	mn
Decay :		
by line retrace erasure, adjustable	from 1 s to 15	mn
Resolution :		
by orthogonal writing and reading at 50 % modulation . .	600	T.V. lines per diameter

This developmental tube is intended for engineering evaluation. This given data is subject to change unless otherwise arranged. No obligations are assumed for notice of change or future manufacture of this tube.

THOMSON-CSF
GROUPEMENT TUBES ELECTRONIQUES

GENERAL CHARACTERISTICS

Electrical

Heater voltage	6.3	V
Heater current	0.150	A
Output capacitance	10	pF
Focusing method	electrostatic	
Deflecting method	electrostatic	

Mechanical

Base	CEI 67 - 1 - 37 a
Operating position	any
Weight, approx.	200 g
Dimensions	see drawing

TYPICAL OPERATING CONDITIONS (1)

Voltages listed hereunder are typical values. They may have to be modified according to values given in the operating Data Sheet accompanying each tube.

Heater voltage	6.3 ± 10 %	V
Heater current	0.135 to 0.165	A

	Erasing mode	Writing mode	Reading mode	
Cathode voltage	0	0	0	V
Grid g1 (Wehnelt) voltage				
cut-off voltage −50 V to −100 V	0	to be adjusted	to be adjusted	V
Grid g2 (accelerator) voltage	750	750	750	V
Grid g3 (erasing) voltage	normal fast 750 0	750	750	V
Grid g4 (focus) voltage (2)	to be adjusted 100 to 150	to be adjusted 100 to 150	to be adjusted 100 to 150	V
Deflection D.C. voltages (3) :				
x1 − x2 or D1 − D2	870 to 930	870 to 930	870 to 930	V
y1 − y2 or D3 − D4	870 to 930	870 to 930	870 to 930	V
Peak to peak deflection voltages (4)				
x1 − x2 or D1 − D2	2 x 45	2 x 45	2 x 45	V
y1 − y2 or D3 − D4	2 x 35	2 x 35	2 x 35	V
Grid g5 (decelerator) voltage	1400	1400	1400	V
Grid g6 (wall electrode) voltage	900	900	900	V
Target voltage	10 to 25	200	3 to 10	V

MAXIMUM ELECTRODE CURRENTS

	Writing and reading modes		Fast erasing mode	
Cathode current	1	mA	3	mA
g1 current	5	µA	5	µA
g2 current	1	mA	3	mA
g3 current	50	µA	50	µA
g4 current	10	µA	10	µA
x1 plate current	10	µA	10	µA
x2 plate current	10	µA	10	µA
y1 plate current	10	µA	10	µA
y2 plate current	10	µA	10	µA
g5 current	10	µA	500	µA
g6 current	10	µA	100	µA
Target current	10	µA	100	µA

NOTES

1 - Optimum resolution and uniformity of signal are reached when the tube is protected on its entire length by a double metallic shield made with suitable magnetic permeability materials which is designed to prevent external magnetic and electric fields from impairing the resolving capability of TME 1348.

2 - For optimum resolution, g4 voltage during write mode must be slightly smaller (around 5 V) than g4 voltage during read mode.

3 - D.C. voltages are applied on the deflection plates. These adjustable voltages compensate the geometrical distortions due to electron beam or to imperfect mounting of the deflecting plates. The optimum values to be applied on each pair of deflection plates which correspond to a minimum astigmatism of the beam can be different for the x and y deflection plates and are given on the operating Data sheet accompanying each tube.

4 - The deflection voltages are symmetrically applied on each plate of the deflecting system. Indicated values are for each electrode the peak to peak voltages necessary to deflect on the whole diameter of the target.

PHYSICAL DESCRIPTION AND OPERATING PRINCIPLE

The main components of the tube are an electron gun and a storage target assembly.

The electron gun includes an additional erasing electrode which enables two erasing modes depending on low or high beam current.

The target is made of a storage backplate on which the storage dielectric is deposited.

A general cross-view of the tube is given on fig. 1 and magnified view of the target on fig. 2.

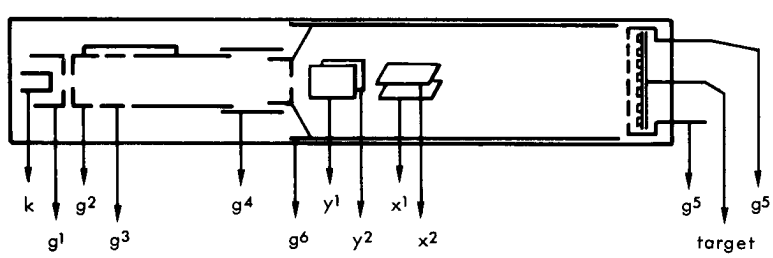

Figure 1

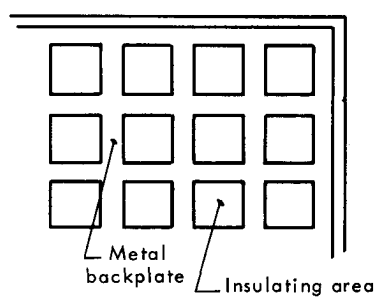

Figure 2

The principle of operation is the charge or discharge of the storage surface, according to the velocity of the primary electron beam through secondary emission of the storage surface.

Typical values (with respect to cathode) in erasing, writing and reading modes are given on fig. 3 as an example of operating conditions.

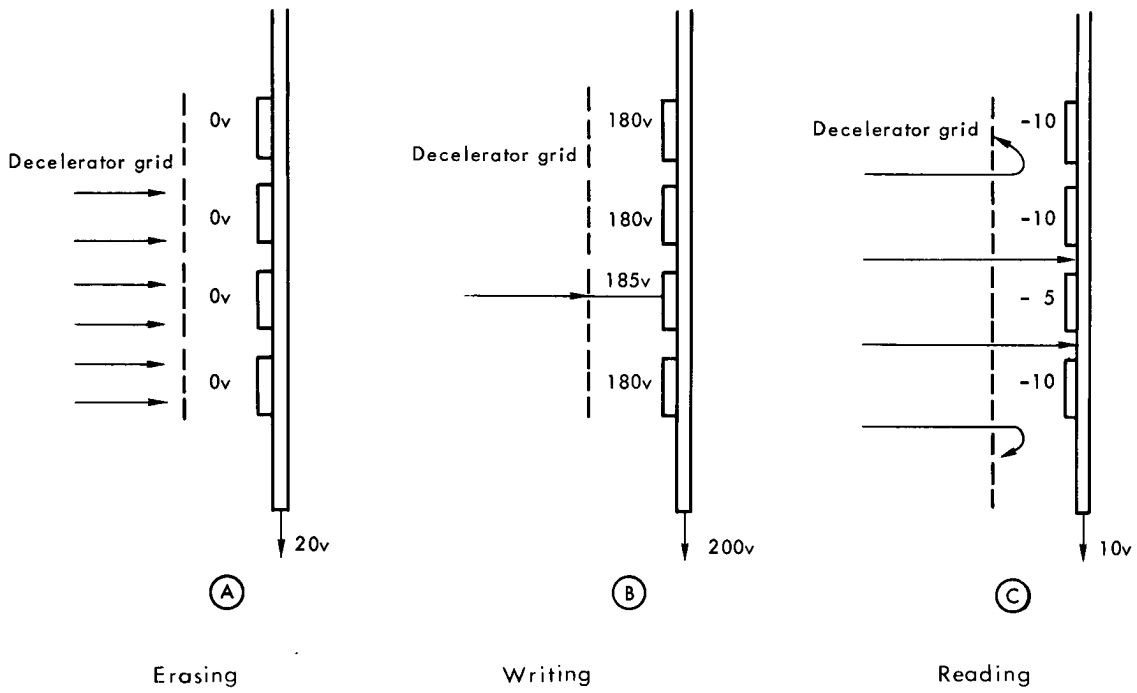

Figure 3

A - ERASE-PRIME

It is necessary to erase residual charges at the storage surface prior to writing. Erasure can be achieved by shifting the backplate voltage to 20 V. The capacitive coupling and the low energy electron beam cause the dielectric to be charged down to 0 V through secondary emission ratio less than 1.

B - WRITE

Storage backplate voltage is shifted to +200 V. Storage surface voltage is shifted to 180 V by capacitive coupling. When the electron beam modulated by the video input signal scans the storage surface, secondary emission ratio is then greater than 1 and positive charges are deposited on the dielectric areas, shifting their potential from 180 V to a few volts more positive values (185 V for example).

C - READ

Once the charge pattern has been written it can be reat out by dropping the storage backplate voltage from 200 V to 10 V and by scanning it with an unmodulated beam. Depending on the written charge pattern the storage surface voltage varies between OV and – 10V and signal output varies in exact correspondance. The most negative areas of the dielectric can completely cut off the electron beam while various gray shades can be obtained in areas where the dielectric is less negative. Since the storage surface voltages are negative with respect to gun cathode voltage the reading beam has no adverse effect on the pattern and the read-out is non destructive.

OUTLINE DRAWING

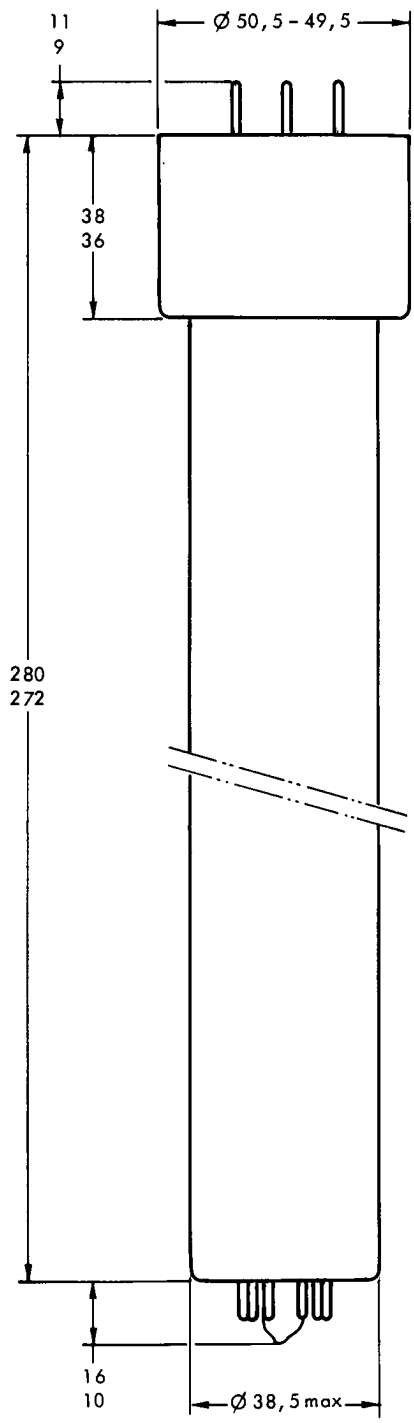

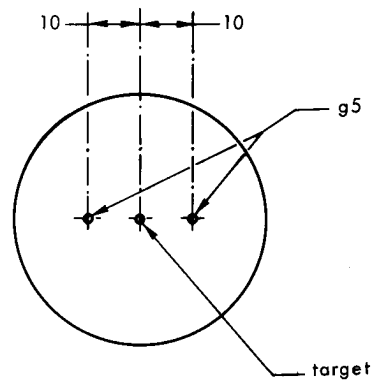

Base 13 pins CEI - 67-1 - 37a

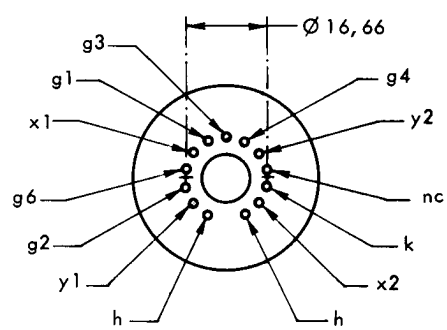

Dimensions in mm.

THOMSON-CSF

GROUPEMENT TUBES ELECTRONIQUES