TME 1239 A
1½" RECORDING STORAGE TUBE

- HIGH RESOLUTION (limiting resolution : 2700 TV lines/diameter)
- SINGLE-ENDED, ELECTROMAGNETIC FOCUS AND DEFLECTION
- NON-DESTRUCTIVE READOUT
- FAST-ERASING (1 TV frame)
- GRAY-SCALE CAPABILITY

The TME 1239A is a low-cost, single-ended, high resolution, non-destructive readout storage tube capable of storing and reading-out information in the form of electrical signals. It is fully interchangeable with the previous TME 1239 in all its applications.

As compared with the latter, it offers a significant increase in resolution under the same operating conditions. In the orthogonal read-write mode, the resolution at 50 % modulation reaches 1500 TV lines/diameter (instead of 1200). Up to 1900 TV lines/diameter at 50 % modulation are obtained in a higher voltage mode. The low voltage mode is to be used in applications where uniformity and low consumption are predominant while the high voltage mode is to be chosen when maximum resolution is of prime importance.

Continuous readout can be achieved for a few minutes without degradation of the stored information. The tube features fast writing and erasing, large storage and integration capability and selective erasure possibility. When gradual erasure of the stored information is required, it is possible to erase during line or image retrace in order to obtain the desired decay.

All these characteristics make the TME 1239A particularly suitable for numerous applications such as : T.V. frame-freeze, slow-scan T.V., data recording and storage, scan conversion, integration of low level video signals, accurate write-read registration.

Owing to its structure and electronoptics similar to 1 1/2" Vidicon, the TME 1239A can use supplies and coil assemblies designed for this Vidicon type.

To achieve the best performances of the tube, the user is advised to refer to the "Operating Instructions" given in the relavant Data Sheet TEV 3140.

The TME 1239A can be implemented in the TTV 3900A Storage Unit manufactured by THOMSON-CSF, and described in Data TEV 3185.

TYPICAL PERFORMANCES

Peak output current	0.2 μA
Writing time :	
- writing over the whole target area	33 - 40 ms (1 T.V. frame)
- writing of one target diameter	50 μs
Erasing time :	
- erasing of the whole written image to residual less than 5 %	33 - 40 ms (1 T.V. frame)
- selective erasing of one target diameter	300 μs
Decay by line retrace erasure	adjustable from 1 s to 15 mn
Reading time for continuous readout	10 to 15 mn
Storage time without readout	several days
Center resolution by orthogonal writing and reading at 50 % modulation (See Figure 1)	normal voltage mode 1500 T.V. lines/diameter high voltage mode 1900 T.V. lines/diameter

GENERAL CHARACTERISTICS

Electrical

Heater voltage	6.3	V
Heater current	0.6	A
Output capacitance (target to all other electrodes)	11	pF
Input capacitance (grid g1 to all other electrodes)	10	pF
Focusing method	electromagnetic	
Deflecting method	electromagnetic	
Coils assembly (focus - deflection - alignement)*	TH 7205 or equivalent (CELCO TV 348, or CLEVELAND 15 VFA 259 - 15 VY or PENN - TRAN)	

* In any case permanent ring magnet sometimes delivered with vidicon coil assembly must be removed.

Mechanical

Base	UTE 9 C 15, (JEDEC E8 - 11)
Operating position	any
Weight, approx.	200 g
Dimensions	see drawing

MAXIMUM RATINGS
(absolute values)

Unless otherwise stated, voltages are given with respect to cathode potential.

Grid g5 voltage	1200	V
Grid g4 voltage	800	V
Grid g3 voltage	800	V
Grid g2 voltage	800	V
Grid g1 voltage :		
- negative bias value	−180	V
- positive bias value	0	V
Peak heater cathode voltage :		
- heater negative with respect to cathode	−150	V
- heater positive with respect to cathode	+150	V
Target voltage	1200	V

TYPICAL OPERATIONS

Unless otherwise stated, voltages are given with respect to cathode potential.

Heater voltage	6. 3 ± 10 %	V
Heater current	0. 6	A

Normal voltage mode

	Erase mode	Write mode	Read mode	
Cathode voltage	0	0	0	V
Grid g1 (wehnelt) voltage	0	to be adjusted	to be adjusted	V
- cut-off voltage : −50 V to −100 V				
Grid g2 (accelerator) voltage	450	450	450	V
Grid g3 (erasing) voltage	normal / fast			
	450 / 0 to −30	450	450	V
Grid g4 (focus) voltage*	350 to 450	350 to 450	350 to 450	V
Grid g5 (decelerator) voltage	750	750	750	V
Target voltage	10 to 30	200	3 to 10	V
Resolution (Figure 1)			curve 1	

High voltage mode

	Erase mode	Write mode	Read mode	
Cathode voltage	0	0	0	V
Grid g1 (wehnelt) voltage	0	to be adjusted	to be adjusted	V
- cut-off voltage : −75 V to −150 V				
Grid g2 (accelerator) voltage	700	700	700	V
Grid g3 (erasing) voltage	normal / fast			
	700 / 0 to −30	700	700	V
Grid g4 (focus) voltage*	550 to 700	550 to 700	550 to 700	V
Grid g5 (decelerator) voltage	1100	1100	1100	V
Target voltage	10 to 30	200	3 to 10	V
Resolution (Figure 1)			curve 2	

* These values can vary depending on the type of coil assembly used. To obtain the best resolution, a slight correction of grid g4 potential (about −10 V) is needed in writing mode.

For best operation of readout preamplifier it is recommended to connect a by-pass capacitor between g4 and ground (for example 0. 1 μF) on g4 pin located in front of the tube.

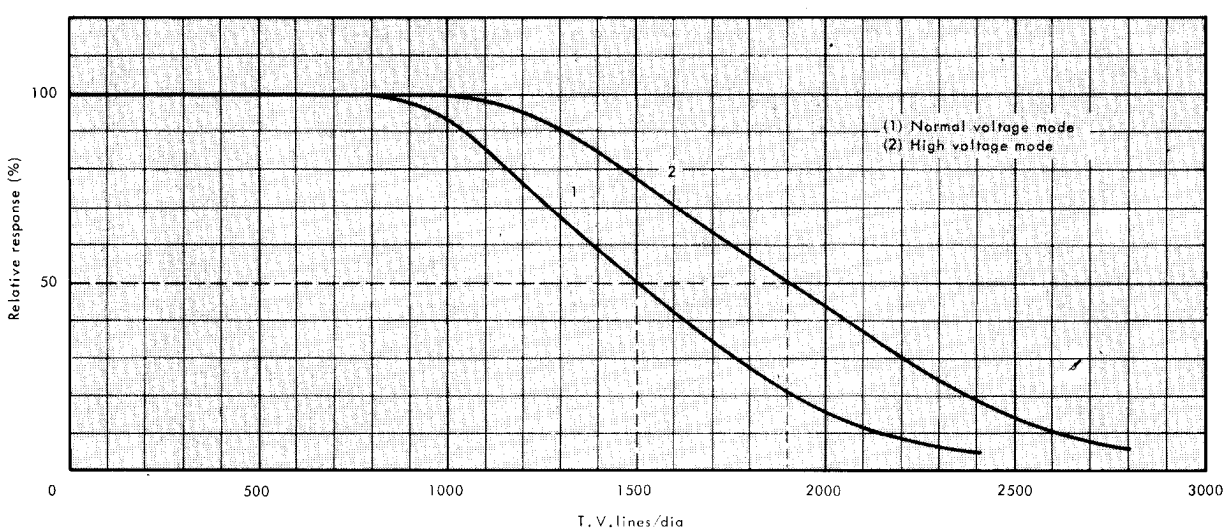

Figure 1 - Resolution characteristics

The above curves give the modulation measured by orthogonal read/write method. In practice, the values of resolution at 10 % modulation in sinusoidal writing and colinear reading (M.T.F.) is about 1. 1 times the values of resolution at 50 % modulation in orthogonal writing and reading.

PHYSICAL DESCRIPTION AND OPERATING PRINCIPLE**

The main components of the tube are an electron gun and a storage target assembly.
The electron gun includes an additional erasing electrode which enables two erasing modes, normal or fast, depending on low or high beam current.
The target is made of a storage backplate on which the storage dielectric is deposited.
A general cross-view of the tube is given on fig. 2, and magnified view of the target on fig. 3.

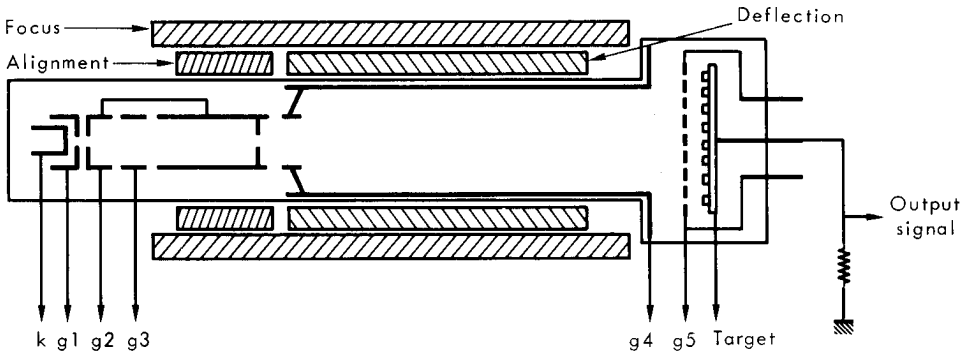

Figure 2

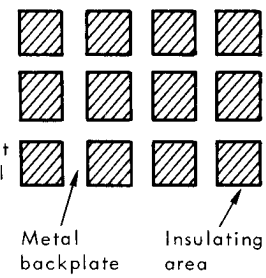

Figure 3

The principle of operation is the charge and discharge of the storage surface, according to the velocity of the primary electron beam through secondary emission of the storage surface.
Typical values (with respect to cathode) in erasing, writing and reading are given in fig. 4 as an example of operating conditions.

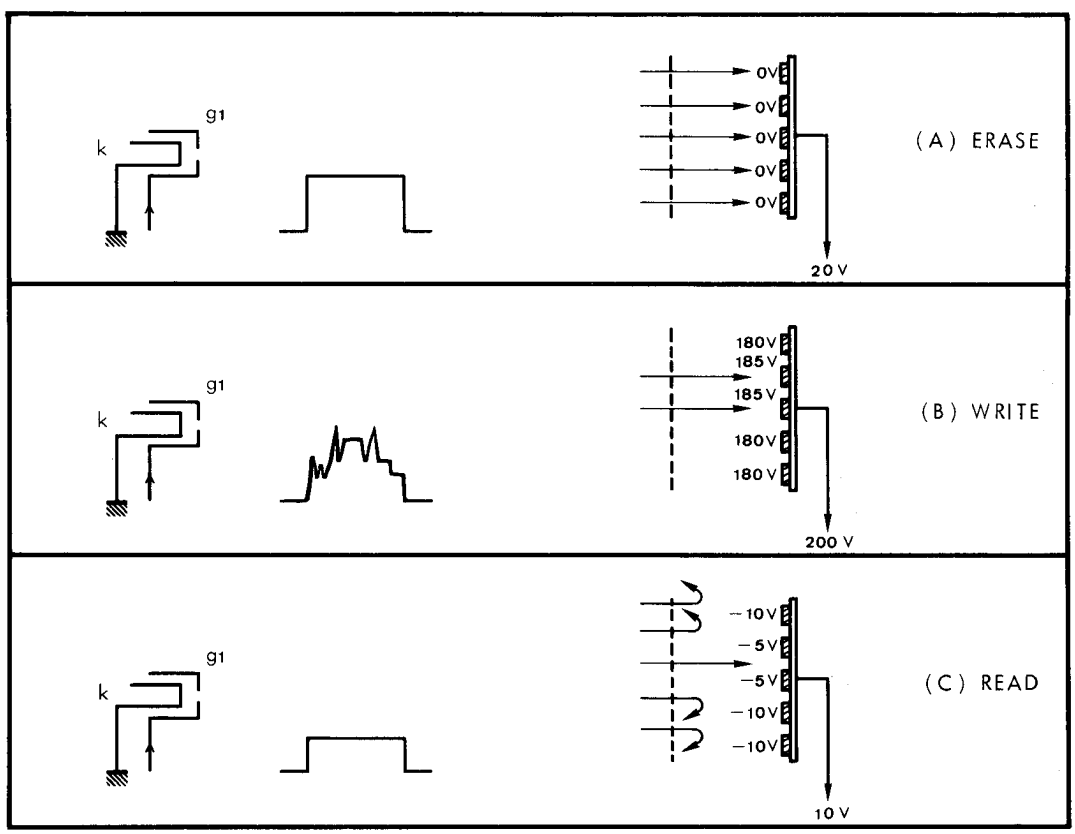

Figure 4

** Detailed considerations about "Recording Storage Tubes" principles and operations are given in the Technical Information DATA TEV 6013 which we ask the user to refer to.

A - ERASE-PRIME

It is necessary to erase residual charges at the storage surface prior to writing. Erasure can be done by shifting the backplate voltage to 20 V. The capacitive coupling and the low energy electron beam cause the dielectric to be charged down to 0 V through secondary emission ratio less than 1.

B - WRITE

Storage backplate voltage is shifted to + 200 V. Storage surface voltage is shifted to 180 V by capacitive coupling. When the electron beam modulated by the video input signal scans the storage surface, secondary emission ratio is then greater than 1 and positive charges are deposited on the dielectric areas, shifting their potential from 180 V to a few volts more positive values (185 V for example).

C - READ

Once the charge pattern has been written it can be readout by dropping the storage backplate voltage from 200 V to 10 V and by scanning it with an unmodulated beam. Depending on the written charge pattern the storage surface voltage varies between 0 V and − 10 V and signal output varies in exact correspondance. The most negative areas of the dielectric can completely cut-off the electron beam while various gray shades can be obtained in areas where the dielectric is less negative. Since the storage surface voltages are negative with respect to gun cathode voltage the reading beam has no adverse effect on the pattern and the readout is non destructive.

OUTLINE DRAWING

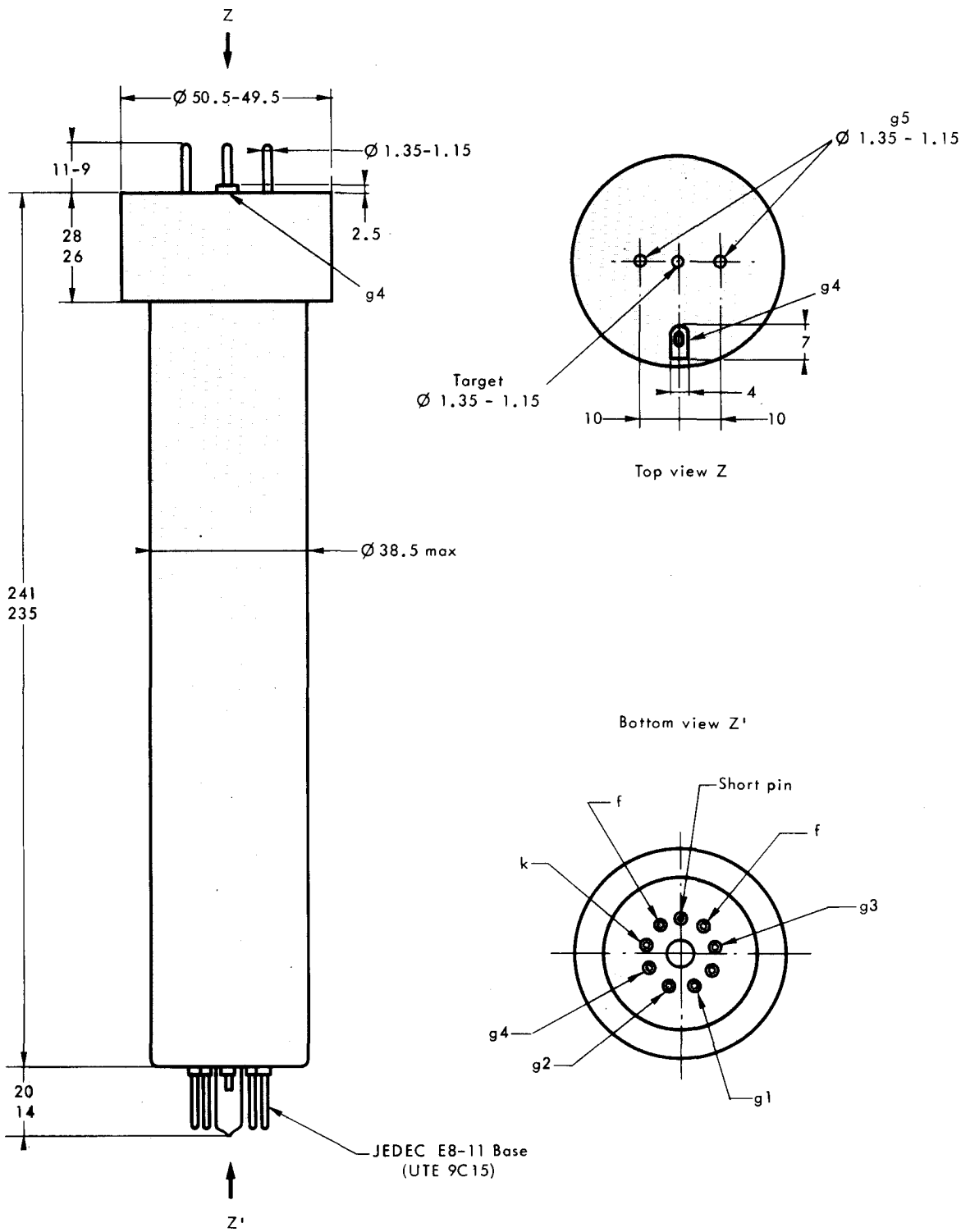

Dimensions in mm.