TENTATIVE

TMA 410
SCAN CONVERTER STORAGE TUBE

- SMALL NECKS – SHORT LENGTH
- DOUBLE ENDED
- ELECTROMAGNETIC DEFLECTION.
- HIGH RESOLUTION : 1 600 T.V. LINES AT 50% MODULATION.

The TMA 410 is a small size dual gun, electrical signal storage tube. The writing beam deposits, by induced conductivity, electron charges on a thin semi-conducting target. The recorded signals are read by the reading beam by use of secondary emisssion effects during a large and adjustable number of reading frames.

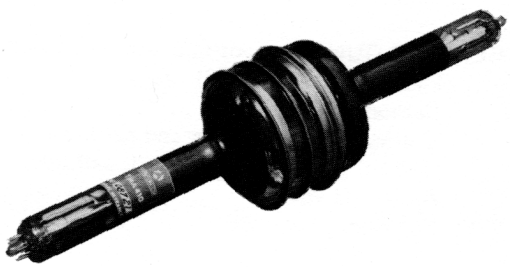

The TMA 410 scan converter tube allows :

- simultaneous writing and reading without crosstalk,
- writing in a mode of scanning and reading in a different mode,
- adjustment of the storage time,
- superposition of several kinds of information.

Owing to its very small size, rugged construction and light weight the TMA 410 is specially suitable for use in transistorized ground or airborne equipment. Its symetrical deflections and the absence of collimation make it free from geometrical distortion.

TYPICAL APPLICATIONS

Air traffic control (conversion of P.P.I. radar scan to T.V. scan)

In radar bright display equipments this tube allows :

- display on a T.V. monitor of a bright, sharp picture in high ambient lighting conditions,
- visual target tracking by means of the tube storage characteristics,
- retransmission and multiple display of the radar picture.

Remote transmission of radar or T.V. informations over narrow bandwidth channels.
Signal to noise enhancement by integration.
Superposition of several types of input data.

TYPICAL PERFORMANCES

Output signal current	0.2 to	2.0	µA
Output capacitance		12	pF
Resolution	300 P.P.I. range rings at 50% modulation (equivalent to approximately 1600 T.V. lines)		
Storage time with continuous read-out*	adjustable from 0.1 to 10 s at 50% residual		
Gray levels		7	
Erasing time	max.	5	s

* *Other ranges of storage time on request.*

THOMSON-CSF
GROUPEMENT TUBES ELECTRONIQUES

TENTATIVE

OPERATING CONDITIONS

Unless otherwise stated, voltages are given with respect to ground.

ABSOLUTE RATINGS

WRITING GUN - Electrostatic focusing, electromagnetic deflection.

Heater voltage (note 1)		6.3 ± 10 %	V
Cathode k' voltage		−8	kV
Voltage between heater and cathode		± 150	V
Control grid g'1 voltage (w.r.t. cathode)	0	to −150	V
Anode g'2 voltage		0	V
Focusing g'3 voltage	−4	to −8	kV

READING GUN - Electrostatic focusing, electromagnetic deflection.

Heater voltage (note 2)		6.3 ± 10 %	V
Cathode k voltage		−1.5	kV
Voltage between heater and cathode		± 150	V
Control grid g1 voltage (w.r.t. cathode)	0	to −150	V
Anode g2 voltage	−50	to + 50	V
Focusing g3 voltage	0	to −1.5	kV

TYPICAL OPERATION

WRITING GUN

Heater voltage		6.3	V
Heater current, approx.		0.15	A
Cathode k' voltage		−7.5	kV
Voltage between heater and cathode		0	V
Control grid g'1 voltage for cut-off (w.r.t. cathode)	−40	to −100	V
Anode g'2 voltage		0	V
Focusing g'3 voltage	−5.5	to −7.5	kV

READING GUN

Heater voltage		6.3	V
Heater current, approx.		0.15	A
Cathode k voltage		−1.2	kV
Voltage between heater and cathode		0	V
Control grid g1 voltage for cut-off (w.r.t. cathode)	−40	to −100	V
Anode g2 voltage	−40	to +20	V
Focusing g3 voltage	−0.8	−1.2	kV

STORAGE ASSEMBLY

Target voltage		0	V
Collector voltage	0	to 40	V
Shading corrector voltage	0	to 60	V

NOTES

1 - Heater insulated for 8 kV w. r. t. ground.
2 - Heater insulated for 2 kV w. r. t. ground.

OPERATING RECOMMENDATIONS

1 — The writing beam should never be motionless on the storage surface which might be damaged. Too high writing beam current density must be avoided.
2 — The reading beam should never be motionless.
3 — Provide a suitable shield in order to protect the tube from stray electric and magnetic fields.

TENTATIVE

PHYSICAL DESCRIPTION AND OPERATING PRINCIPLE

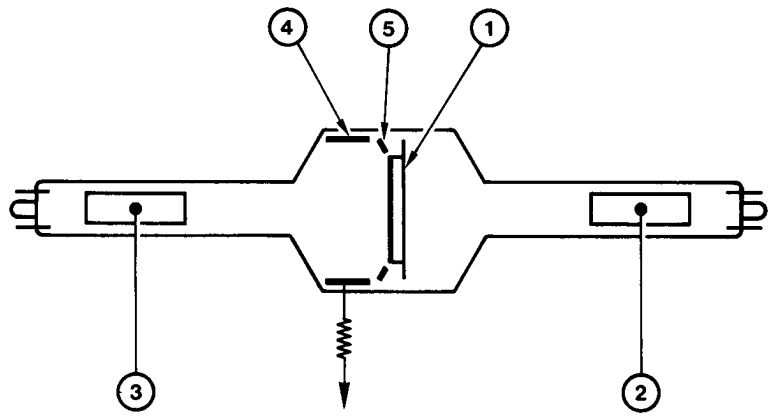

Fig. 1

The TMA 410 essentially consists of (see fig. 1) :

- a storage target (1) made of a dielectric layer deposited on a thin metallic backplate (the metallic side facing the writing gun)
- a writing gun (2)
- a reading gun (3)
- a collecting assembly made of two electrodes (4) and (5).

Due to its high velocity, the writing beam is able to penetrate the metal backplate and to create charges in the dielectric by induced conductivity (EBIC). These charges are stored on the surface of the target facing the reading gun. The quantity of stored charges depends on the scanning speed and current density.

The reading beam scanning the storage surface, each scan is removing a portion of the charge pattern by secondary electron emission.

The secondaries collected by the output electrode (4) give rise to a video signal progressively decreasing.

Typical decay curves given in fig. 2 are obtained by changing both collector voltage and/or reading current.

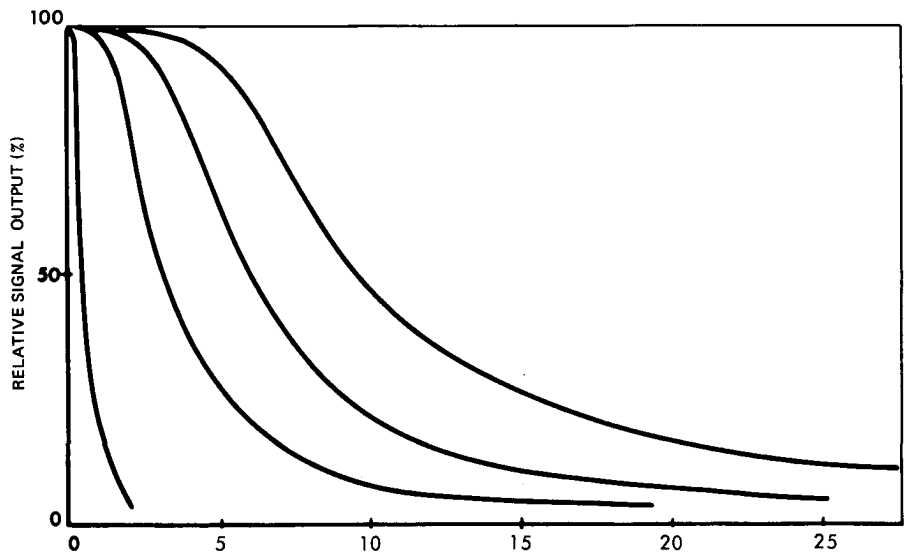

Fig. 2

THOMSON-CSF
GROUPEMENT TUBES ELECTRONIQUES

TENTATIVE

OUTLINE DRAWING

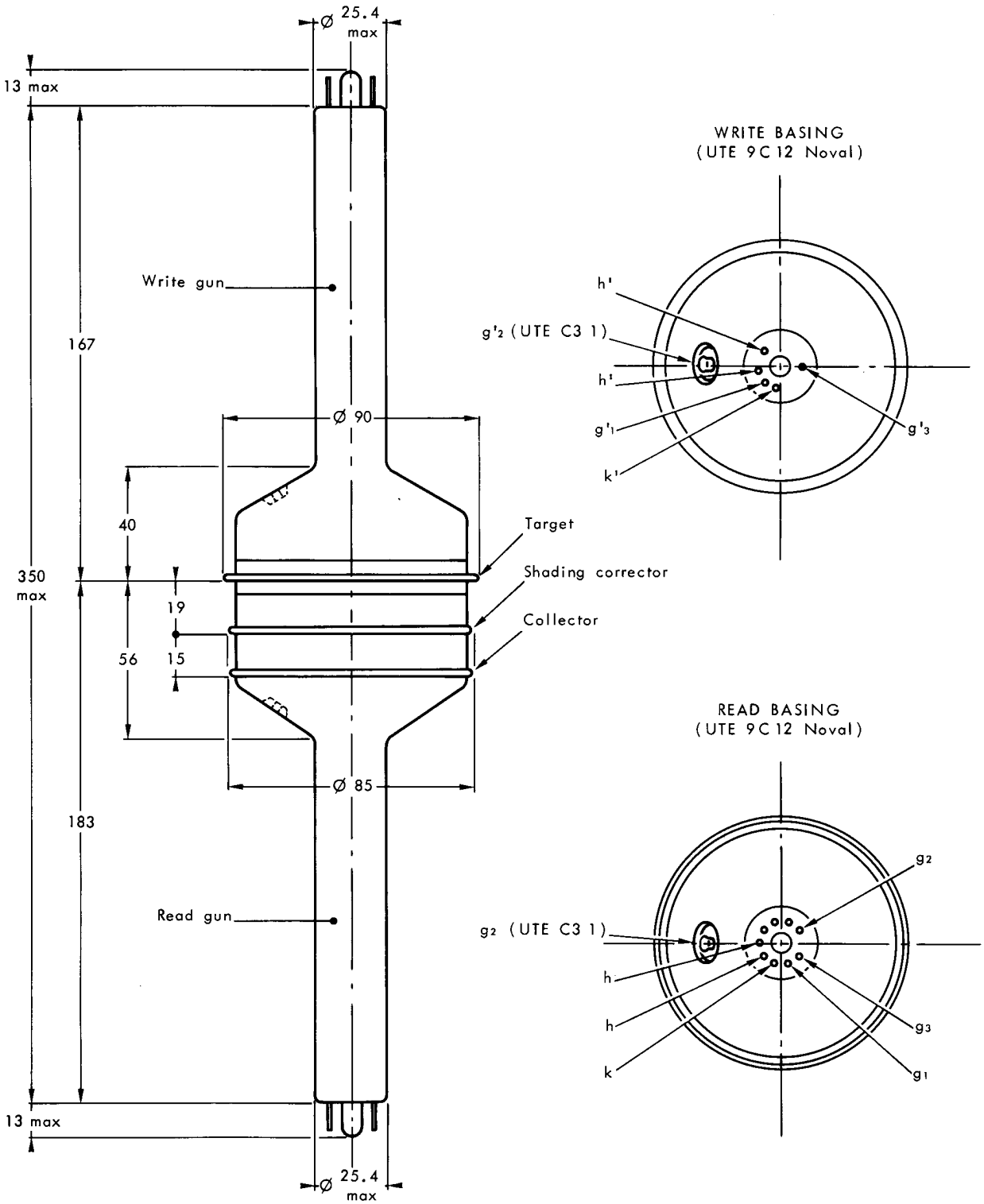

Dimensions in mm.