Bendix® Type TK-53
(Retrofit for Type SRV-38)

REFLEX KLYSTRON

(MECHANICALLY TUNED)

DESCRIPTION

The Bendix® Type TK-53 is a ruggedized, low voltage, mechanically tuned Ka band reflex oscillator designed for use as a CW power source over a frequency range of 34.0 to 35.6 Kmc/sec. This tube incorporates a unique method of tuning the cavity resonator which permits the achievement of a relatively flat power output and electronic tuning characteristic with variation of the operating frequency. Unlike the conventional capacitive type tuners wherein the interaction gap spacing of the resonant cavity is varied to control the operating frequency, the interaction gap of the TK-53 is fixed at optimum spacing. Tuning is accomplished by moving a dielectric rod into the electric field surrounding the interaction gap. The tuner rod is moved by a spring loaded differential screw acting through a bellows in the wall of the vacuum envelope. This screw is designed to receive an allen wrench for tuning purposes. Since a flexible diaphragm is no longer necessary as a cavity wall for tuning purposes, the cavity is designed as a rigid structure. The electron gun and repeller structures are mounted rigidly on ceramics in order to ruggedize these assemblies and to eliminate the use of all mica insulators which are subject to decomposition and flaking under some environmental conditions. The output coupling is accomplished by means of an internal tapered section of waveguide which couples radio frequency energy from the cavity resonator through a non-resonant iris. This waveguide section tapers in the narrow dimension only from the iris to a terminating choke abutting a circular low loss glass output window. The output fitting of the tube is designed to match and fasten directly to a standard UG-599/U or UG-600/U waveguide flange. The bulb is of steel construction and hence provides protection from external magnetic fields for the internal electron optics structure.

APPLICATION NOTES

Insulation The bulb of the TK-53 is designed to operate at resonator voltage potential hence requiring a resonator voltage supply having its positive polarity grounded when the tube is to be mounted directly on the waveguide flange. If the desired application requires that the tube shall be operated above ground or "hot" with respect to ground, the tube and the waveguide flange may be insulated by means of a mica sheet and four insulating bushings between the mounting screws, tube and waveguide flange.

Cooling At room temperature without a tube enclosure no forced cooling is required. If the tube is to be operated in an enclosure, care should be taken to insure that adequate cooling is provided in order that the bulb temperature does not become excessive since impairment of tube life may result.

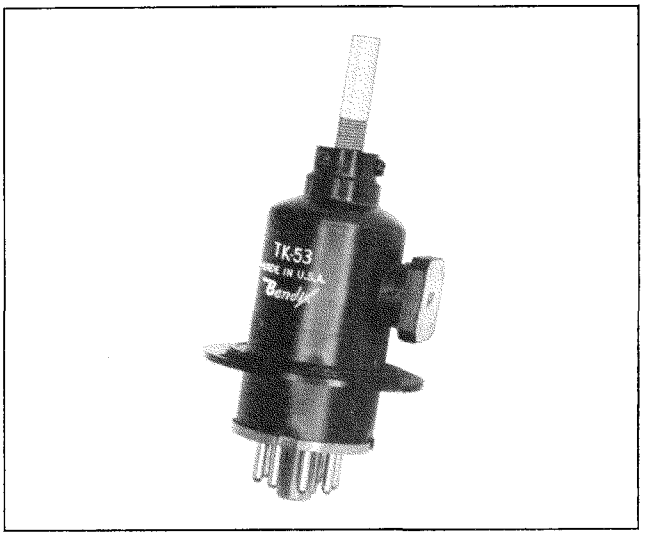

Output Load The tube has been designed for operation into a matched waveguide load. When operation into a reactive load is necessary, adequate attenuation should be inserted in the load circuit between the tube and the load to limit the voltage standing wave ratio at the tube in order to prevent impairment of tube performance.

Repeller Modes The tube should be operated in the repeller voltage mode defined in this data sheet. However, modes do exist at other repeller voltages than that specified which should be considered when the design of AFC circuits is undertaken to prevent lock-in on one of these other modes.

MAXIMUM RATINGS

(ABSOLUTE VALUES)

Filament Voltage	6.3 ± 8% volts
Resonator Voltage	425 volts D.C.
Reflector Voltage	—400 volts D.C.
Resonator Current	40 mAdc
Heater-Cathode Voltage	±50 volts

PHYSICAL CHARACTERISTICS

- *Dimensions:* Refer to the outline drawing.
- *Weight:* 4.3 ounces.
- *Base:* Small wafer octal 8 pin, B8-21, low loss phenolic.
- *Coupling to Wave Guide:* Direct. Fastens to UG-599/U or UG-600/U flange.
- *Cooling:* Convection.
- *Mounting Position:* Any.
- *Cavity:* Copper.
- *Bulb:* Metal.
- *Output Window:* Low Loss Glass.

THE Bendix CORPORATION
Red Bank DIVISION, EATONTOWN, NEW JERSEY

Publication No. R01-12

Printed in U.S.A.

REFLEX KLYSTRON
(MECHANICALLY TUNED)

Bendix Type TK-53
(Retrofit for Type SRV-38)

AVERAGE CHARACTERISTICS

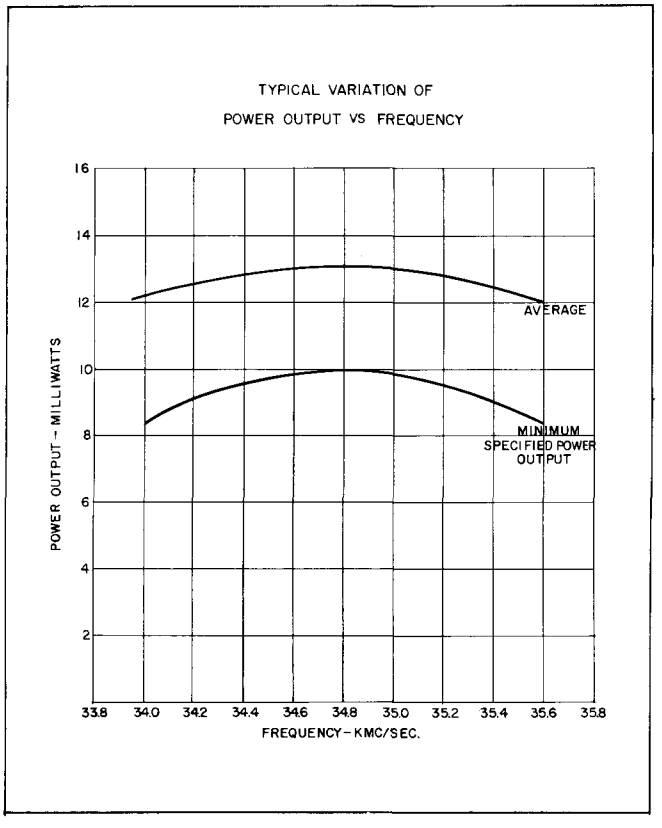

POWER OUTPUT VS. FREQUENCY

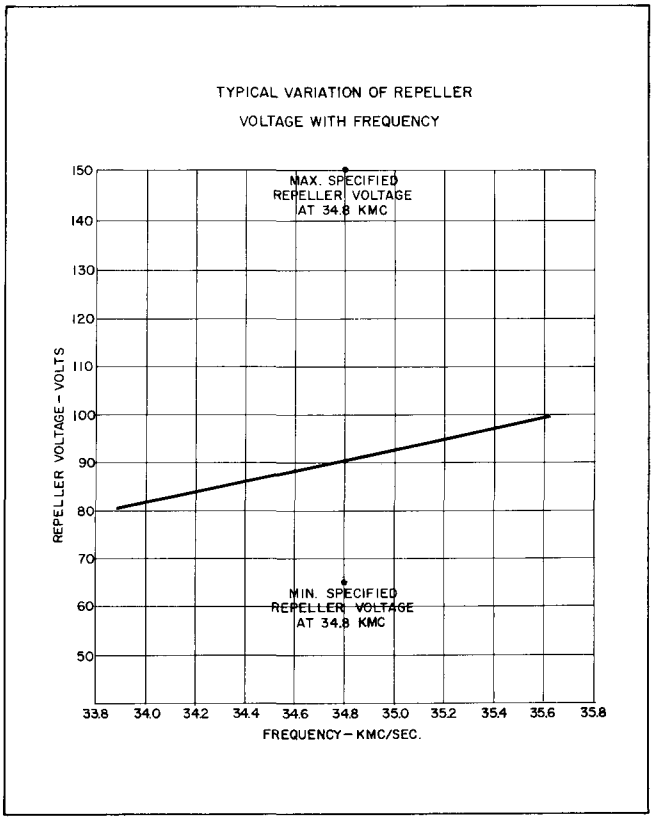

REFLECTOR VOLTAGE VS. FREQUENCY

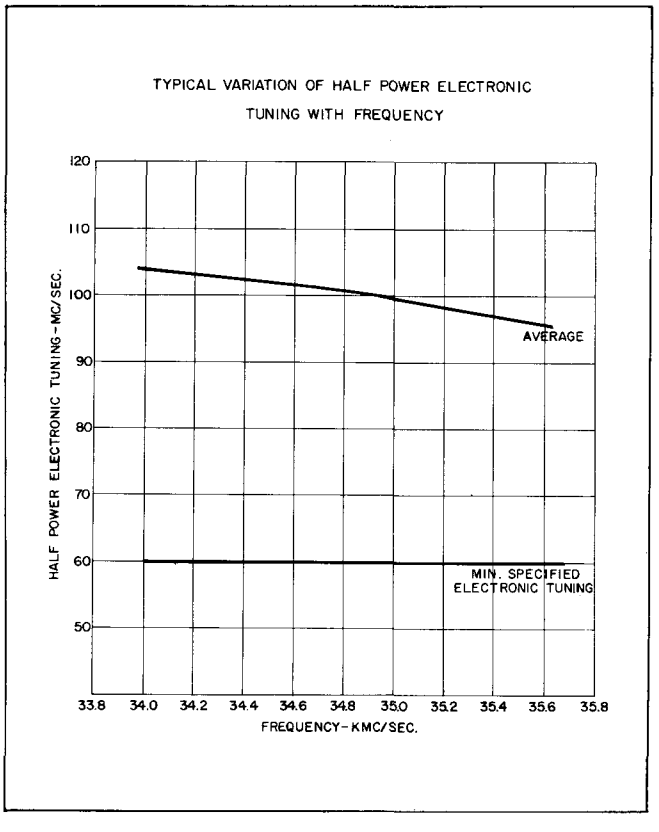

ELECTRONIC TUNING VS. FREQUENCY

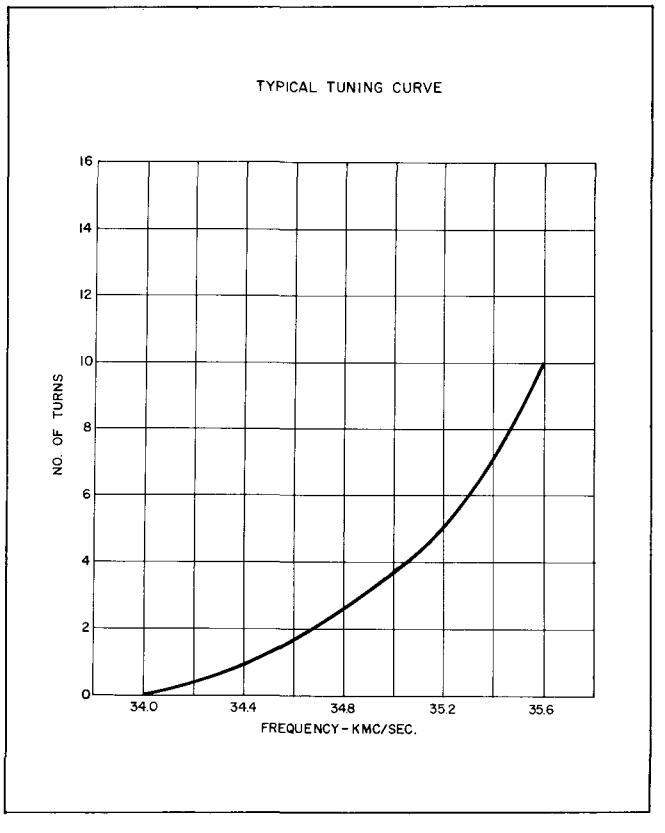

TUNER TURNS VS. FREQUENCY

REFLEX KLYSTRON
(MECHANICALLY TUNED)

Bendix Type TK-53
(Retrofit for Type SRV-38)

ELECTRICAL CHARACTERISTICS & TEST CONDITIONS

Test Conditions and Specification Limits

TEST	CONDITIONS	SYMBOL	LIMITS		UNITS
			MIN.	MAX.	
PRODUCTION TESTS:					
Total Reflector Current	Er = −150 Vdc	Ir	—	10.0	μAdc
Reflector Leakage Current	Er = −150 Vdc	Ir	—	10.0	μAdc
Reflector Gas Current	Er = −150 Vdc	Ir	—	5.0	μAdc
Resonator Current	Er = −75 to −260 Vdc Tube in non oscillating state	Ik	—	60	mAdc
Mechanical Tuning Range	Er/max Po	F	34,000	35,600	Mc
Power Output (1)	Test Conditions	Po	10.0	—	mW
Power Output (2)	Er/max Po; F = 34,000 ± 0.3% Mc; F = 35,600 ± 0.3% Mc	Po	8.5	—	mW
Reflector Voltage	Test Conditions; Er/max Po	Er	−75	−260	Vdc
Electronic Tuning	Er/50% max Po		60	—	Mc
Emission	Ef = 5.8 v	△Ik/Ik	—	10	%
Bump	Test Conditions; Er/max Po	△Po/Po	—	10	%
DESIGN TESTS:					
Electrode Insulation	400 Vdc, tube cold	Rk-rs	2.0	—	Megohms
Heater Current	Test Conditions	If	0.54	0.66	Amps
Insulation	Ehk = ±45 Vdc	Ihk	—	100	μAdc
Hysteresis	Test Conditions		—	5	%

GENERAL TEST CONDITIONS:

Ef	Eres	Er	F
6.3 volts	+400 Vdc	Adjust −60 to −300 Vdc	34,800 ± 0.3% Mc

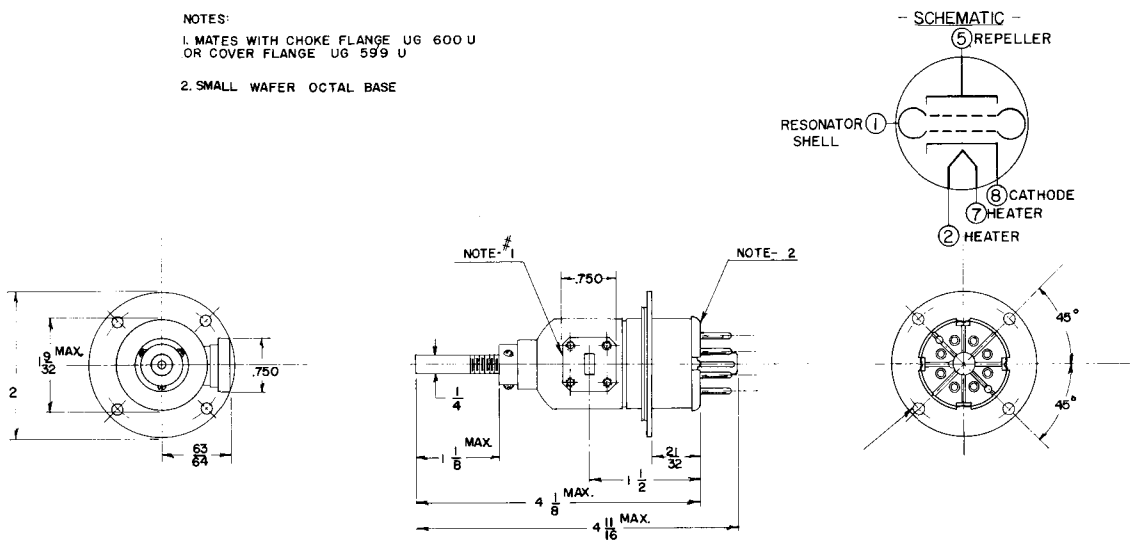

OUTLINE DRAWING

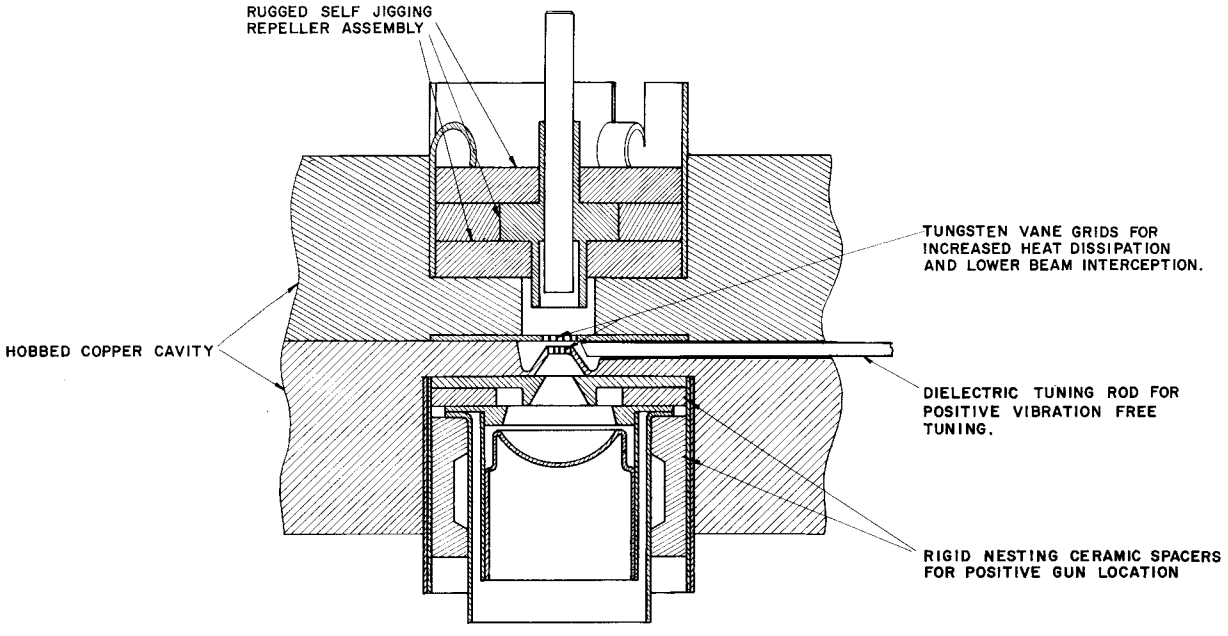

STRUCTURAL FEATURES OF THE TK-53