TH 9824
1" VIDICON

- ELECTROSTATIC FOCUS AND DEFLECTION
- GOOD RESOLUTION
- EXCELLENT UNIFORMITY
- GOOD RASTER LINEARITY
- FOR LIGHTWEIGHT CAMERA
- MILIRARY AND SPACE TV

The TH 9824 is a fully electrostatic 1" Vidicon particularly suitable for applications where power, weight and volume are all of prime consideration. TH 9824 is intended for compact, lightweight, transistorized cameras in space T.V. and other closed circuit equipments.

The scanning electron beam is focused by a separate electrode operating at an appropriate potential. The deflection is ensured by two crossed pairs of deflection plates to which are applied periodical scanning voltages. These characteristics allow for suppressing the focus and deflection coils used in previous Vidicons.

Additional features over conventional Vidicons are :

- Reduction of the size and weight of the camera (the outer diameter of the camera can be less than 38 mm).
- Substantial reduction of power requirements.
- Great simplicity in supplying the electrodes of the tube : focusing voltage is simply provided by a bridge and deflection voltages are easily provided by usual transistorized supply.
- Resolution and image dimensions are maintained even for large variations of electrode voltages if these electrodes are energized by the same power supply.
- Excellent uniformity of output signal due to the separate post-acceleration electrode g5 the voltage of which is 1.5 to 2 times the g4 voltage in optimum operating.
- Higher uniformity of resolution on the entire scanned area. The limiting resolution can be reached by the use of a weak alignment field.

Optimum resolution and uniformity of signal are reached when the tube is protected on its entire length by a double metallic shield made with suitable magnetic permeability material designed to prevent external magnetic and electric fields from impairing the resolving capability of TH 9824.

Due to a new low lag photoconductive layer excellent images are obtained for a wide range of faceplate illuminations.

Satisfactory quality picture with good resolution and acceptable signal to noise ratio can be obtained at illumination of 0.4 lx (40 mfc) on the faceplate (4 to 8 lx on the subject with an unity numerical aperture lens) giving rise to a signal current of 50 nA at 50 nA dark current. For such illuminations, higher signal current is obtained by increasing dark current up to 100 nA, value beyond which a signal saturation will occur.

Due to good design, high reliability is obtained throughout the tube life. Requirement for alignment field is reduced to a minimum by precise electron gun mounting. An extremely flat faceplate avoids all optical distortions and allows for the use of any good quality lens.

The heater power requirement is low and the reduced heat dissipation improves the quality of the picture by lowering the faceplate temperature.

GENERAL CHARACTERISTICS

Electrical

Cathode	unipotential indirectly heated oxide coated		
Heater :			
- voltage	6. 3		V
- current	0. 135 to 0. 165		A
Minimum preheating time	60		s
Output capacitances :			
- target to all other electrodes	2. 5		pF
- deflector to all other electrodes	6		pF
Spectral response	see curve		
Focusing method	electrostatic		
Deflection method	electrostatic		

Mechanical

Overall length	max.	165	mm	(6. 49")
Overall diameter	max.	29	mm	(1. 14")
Bulb diameter	max.	26. 7	mm	(1. 03")
Base (Ditetrar 13 pins)	JEDEC E 13 - 90			
Socket (note 1)	CINCH 203 - 62 - 13.031 or equivalent			
Photoconductive layer :				
- normal dimensions of image on target	12. 7 x 9. 5		mm	
- maximum useful diagonal diameter (4 x 3 aspect ratio)	17		mm	
- orientation of quality rectangle	horizontal scan parallel to the plane passing through the tube axis and short index pin			
Mounting position	any			
Net weight, approximate	60		g	

OPERATING CONDITIONS

(note 2)

Maximum ratings (absolute values)

Electrode g5 voltage (post acceleration electrode)		800	V
Electrode g4 voltage (wall electrode)		800	V
Horizontal deflection D.C. voltage		500	V
Vertical deflection D.C. voltage		500	V
Peak to peak horizontal deflection voltage		2 x 70	V
Peak to peak vertical deflection voltage		2 x 70	V
Electrode g3 voltage (beam focus)		800	V
Electrode g2 voltage (accelerator)		350	V
Electrode g1 voltage (electrode for picture cut-off)			
- negative bias value		300	V
- positive bias value		0	V
Heater voltage	max.	6.9	V
	min.	5.7	V
Peak heater-cathode voltage :			
- heater negative with respect to cathode		125	V
- heater positive with respect to cathode		10	V
Target voltage		100	V
Dark current		100	nA
Peak target current (note 3)		300	nA
Face plate :			
- illumination		10000 lx or 1000	fc
- temperature		70	°C

TYPICAL OPERATION

Operational conditions

Scanned area ..... *12.7 mm x 9.5 mm*
Faceplate temperature ..... *25 ± 5°C*

Electrode g5 voltage	500 to 600	V
Electrode g4 voltage	300	V
Deflection D.C. voltage (note 4) :		
- horizontal deflection	270 to 330	V
- vertical deflection	270 to 330	V
Peak to peak deflection voltage (note 5) :		
- horizontal x 1 - x 2 or D1 - D2	2 x 40	V
- vertical y 1 - y 2 or D3 - D4	2 x 30	V
Electrode g3 voltage	0 to 120	V
Electrode g2 voltage	300	V
Electrode g1 voltage (note 6)	- 40 to - 130	V
Minimum blanking peak to peak voltage :		
- applied to electrode g1	- 75	V
- applied to cathode	+ 20	V

Typical performances (note 7)

Dark current	20	nA
Target voltage (note 8)	20 to 70	V
Faceplate illumination (note 9)	10 lux or 1	fc
Signal current	200	nA
Average gamma for target illumination between (0.1 and 1 fc) (note 10)	0.65	
Limiting resolution at center of picture (note 11)	450	T.V. lines
Lag (note 12) :		
- maximum	30	%
- average	25	%

SPURIOUS SIGNAL TEST

The test is performed using a uniformly diffused white test pattern that is separated into two zones as shown in drawing.

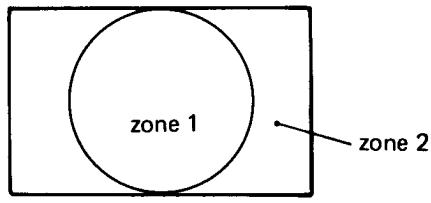

The tube is operated under "Typical Operation" with a dark current of 20 nanoamperes and the lens adjusted to provide a signal current of 100 nanoamperes.

Spurious signals are classified by their size which is measured in percent of raster height.

Will actually be considered as defects, blemishes of contrast greater than 50 % (note 13).

Allowable spot size for each zone is shown in table :

* Ratio D / H (Percent raster height)	Number Allowed			
	Zone 1	Zone 1 + Zone 2		
		a	a + b	a + b + c
a : 0.8% < D/H ≤ 1%	0	1	3	6
b : 0.6% < D/H ≤ 0.8%	1			
c : 0.2% < D/H ≤ 0.6%	3			

0.2% and under : do not count spots of this size unless concentration causes a smudge appearance

* D : average diameter of spot

H : raster height

Smudges, streaks, mottled or grainy background having a contrast ratio greater than 15% constitute a reject.

NOTES

1 - CINCH Manufacturing Company, 1501 Morse Avenue, Elk Grove Village, IL, 60007.

2 - When putting the tube into service or during different adjustments, no particular precautions are to be observed (except for cut-off g1 voltage) for applying starting voltages on different electrodes.

Acceleration voltages being applied it is recommended that D.H. and D.V. voltages are put on before controlling the beam by electrode g1.

3 - Target current is defined as total current in load resistance connected to target electrode : signal current plus dark current.

Video amplifiers must be designed properly to handle peak target current of 0.3 μA to avoid amplifier overload and picture distortion.

4 - D.C. voltages are applied on the deflection plates. These adjustable voltages compensate the geometrical distortions due to electron beam or to imperfect mounting of the deflecting plates. The selection of the appropriate voltages allows for obtaining the best resolution for the chosen electrical mode. The optimum values to be applied on each pair of deflection plates which correspond to a minimum astigmatism of the beam can be different for D.H. and D.V. plates.

5 - The deflection voltages are symetrically applied on each plate of the deflecting system. Indicated values are, for each electrode, the peak to peak periodical voltages.

6 - Without blanking pulses applied on electrode g1.

7 - For 819 interlaced lines standard, 50 frames/second. Test patterns consist in uniformly illuminated slides whose radiance in white level is 100 fc. A substandard 16 mm camera lens at a maximum numerical aperture of f/2 - 35 mm is used

8 - Indicated range of service serves only to illustrate the operating target voltage range normally encountered. The target voltage must be adjusted to that value which gives the designed operating dark current.

9 - All the above mentioned illuminations assume a 2854 °K incandescent tungsten source.

10 - Average "gamma" should be defined as the slope of the rectilinear part of transfer characteristics in log coordinates.

11 - Practically, limiting resolution corresponds to the resolution measured with twin bar test card with a M.T.F. response of about 7%.

12 - Lag is defined as the ratio of residual signal current measured 60 milliseconds after light excitation being removed to the initial signal current ; this value assumes 50 fields/second scanning rate.

13 - Contrast is defined as : $100 \times \frac{\text{increment in video current due to blemish}}{\text{normal signal current}}$

THOMSON-CSF
GROUPEMENT TUBES ELECTRONIQUES

TYPICAL SPECTRAL SENSITIVITY CHARACTERISTICS

For equal values of signal current at all wavelengths (0.02 µA signal current and 0.02 µA dark current for scanned area of 12.7mm x 9.5mm)

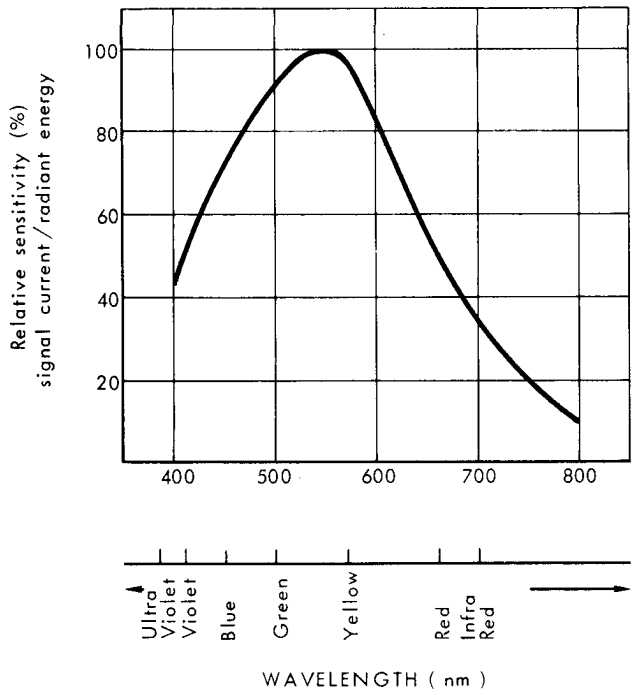

LIGHT TRANSFER CHARACTERISTICS

Illumination uniform over photoconductive layer scanned area 12.7mm x 9.5mm - face plate temperature 25° C

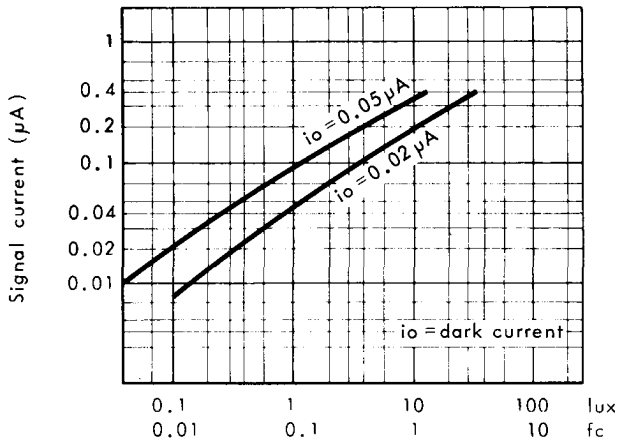

Illumination in lux and foot candles

MODULATION TRANSFER FUNCTION

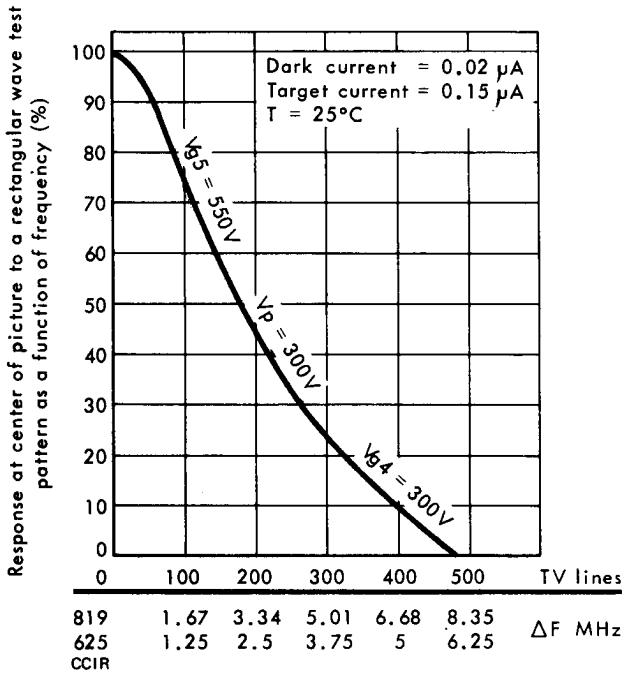

RANGE OF DARK CURRENT

Scanned area of photoconductive layer 12.7mm x 9.5mm

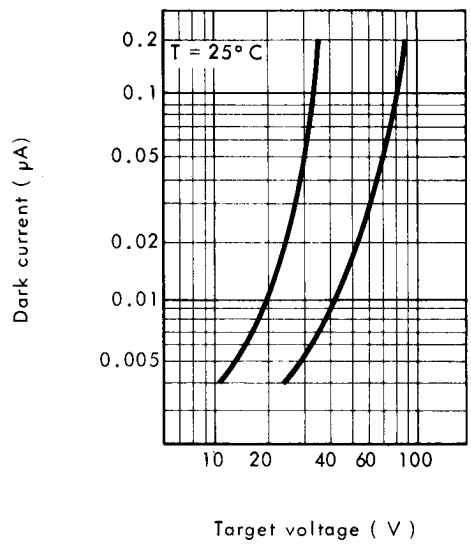

TYPICAL PERSISTENCE CHARACTERISTICS

Initial highlight signal current of 0.15µA scanned area of photoconductive layer 12.7mm x 9.5mm

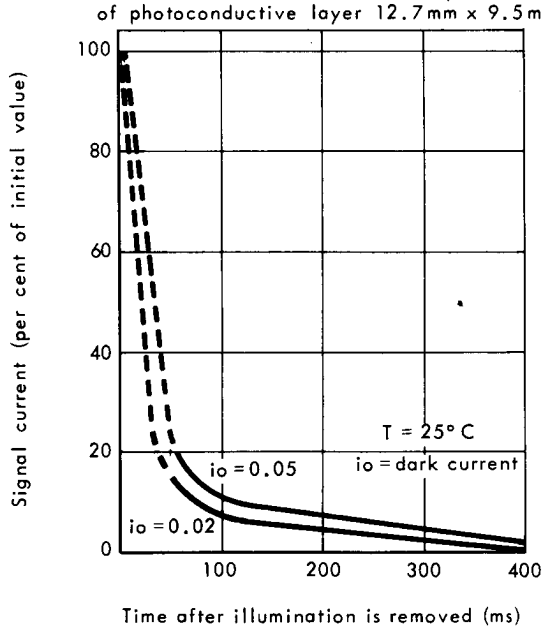

THOMSON-CSF
GROUPEMENT TUBES ELECTRONIQUES

OUTLINE DRAWING

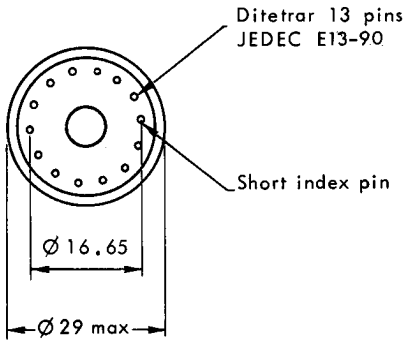

BASING DIAGRAM

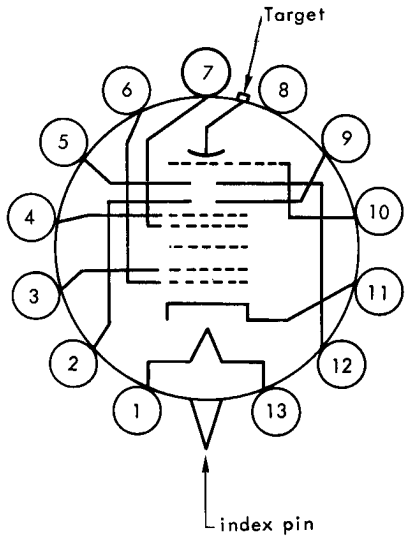

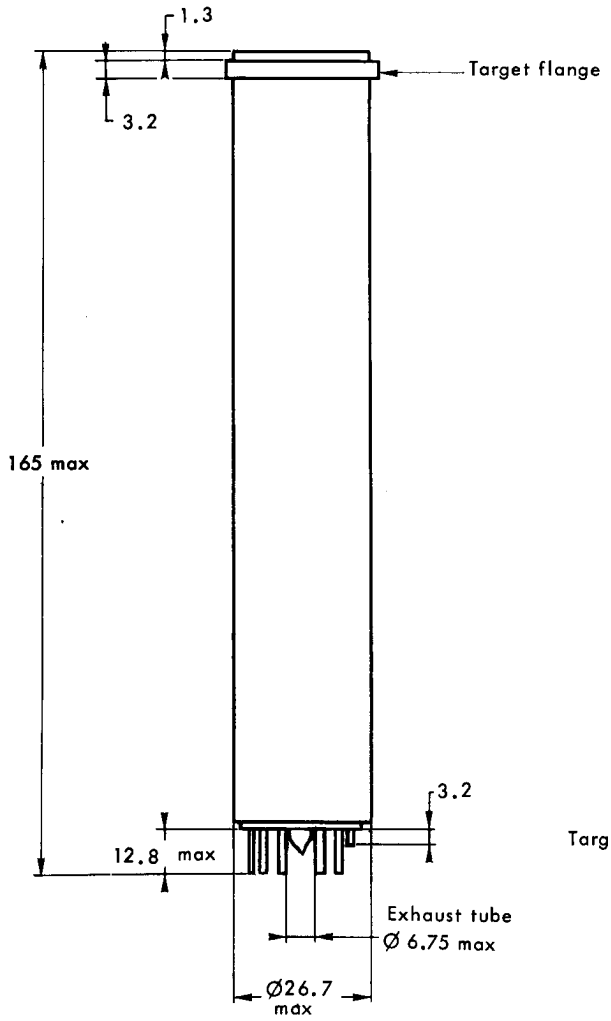

CONNECTIONS			
1	heater	8	internal connection
2	x1 - horizontal deflector	9	x2 - horizontal deflector
3	g2 electrode	10	g5 electrode
4	g4 electrode	11	cathode
5	y2 - vertical deflector	12	y1 - vertical deflector
6	g1 electrode	13	heater
7	g3 electrode	14	short index pin
flange : target			

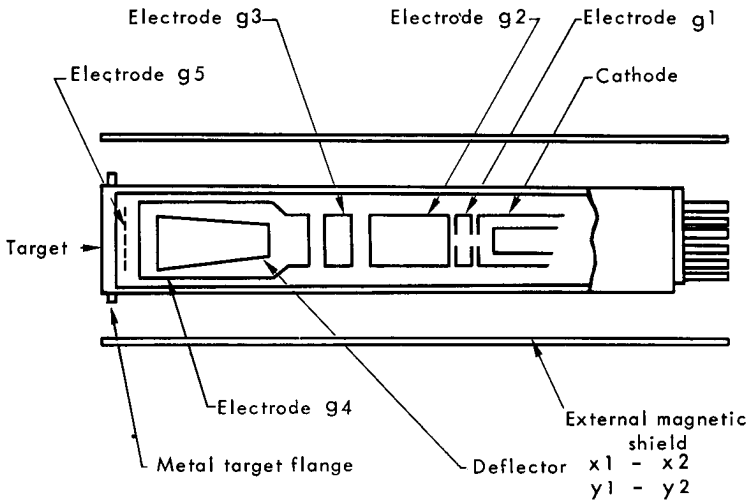

Dimensions in mm.