TH 9475 (F 9475)
THREE CASCADED STAGES LIGHT IMAGE INTENSIFIER TUBE

The TH 9475 (F 9475) is a light image intensifier tube with very high gain designed for night viewing systems. It can be used either for realization of direct viewing night vision system or as intensifier stage optically coupled to a T.V. camera tube.

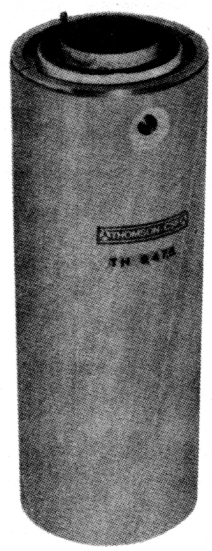

The photocathode is of S20 type with extended red sensitivity and the yellow-green fluorescent P20 phosphor exhibits a high energy efficiency.

The TH 9475 is composed of three electrostatic self-focused image intensifier modules having photocathode and screen useful diameter of 25 mm. These cascaded stages are mechanically and optically coupled through fiber-optics windows. Each module, of diode type, requires only one potential of 15 kV to be applied across the unit. Thereby the tube is operated with 45 kV applied to the viewing screen while the photocathode is at zero potential. This d.c. high voltage is provided by an integral multistage voltage multiplier requiring a sine wave 1500 Hz external supply.

The assembly (tube and voltage multiplier) is encapsulated in a silicone compound with mechanical references for tube mounting.

This tube of ruggedized construction is designed to be operated under severe environmental conditions : vibration, shock and temperature exposure.

GENERAL CHARACTERISTICS

Focusing method	electrostatic
Photocathode :	
type	S20 with extended red sensitivity
face	flat - fibers-optics - elementary fiber 5 μ
minimum useful diameter	25 mm
Viewing screen :	
type	P20 aluminized
Fluorescence	yellow-green
face	flat - fiber optics- elementary fiber 5 μ
minimum useful diameter	25 mm
Numerical aperture of fiber optics, approx.	1
External surfaces (input and output windows)	flat to within 2.5μ
Operating position	any
Overall length	193. 5 mm
Maximum diameter	69. 8 mm
Weight, approximate	800 g

THOMSON-CSF
GROUPEMENT TUBES ELECTRONIQUES

MAXIMUM RATINGS

(Absolute values)

Voltage supply (sine wave - peak to peak)	max.	2800	V
Frequency of voltage supply	max.	2000	Hz
	min.	1400	Hz
Photocathode illumination (note 1)	max.	5.10^{-3}	lux
Storage temperature	max.	+68	°C
	min.	−54	°C
Operating temperature	max.	+52	°C
	min.	−54	°C

OPERATIONAL CHARACTERISTICS

Operating conditions

Normal ambient temperature	20 ± 5	°C
Voltage supply (sine wave - peak to peak)	2700	V
Frequency of voltage supply	1500	Hz
Photocathode potential	0	V
Viewing screen potential	45	kV
Colour temperature of incident light source	2854	°K

Performance

	min.	Typical	max.	
Photocathode sensitivity (note 2)				
– luminous at 2854 °K	150	200	–	µA/lm
– radiant at 800 nm	6	10	–	mA/W
at 850 nm	1	3	–	mA/W
Luminance gain (note 3)	10^4	2.10^4	–	$(cd/m^2)lx$
Background equivalent illumination	–	$0.5.10^{-7}$	2.10^{-7}	lx
Resolution :				
– center	23	25	–	lp/mm
– peripheral	18	20	–	lp/mm
Modulation transfer function :				
– for 5 lp/mm	75	85	–	%
– for 10 lp/mm	45	60	–	%
– for 15 lp/mm	20	35	–	%
Magnification				
– center Mc (note 4)	0.82	0.85	–	
– peripheral Mp (note 5)		1.01	1.06	
Distortion (note 6)	–	20	25	%
Image alignment	–	0.4	0.8	mm
Tube life	–	3000	–	h

ENVIRONMENTAL TESTS

The tube TH 9475 is designed to withstand the following environmental tests without mechanical damage and electrical failure. After completion of the tests the tube will meet all the characteristics specified under " operational characteristics ".

SHOCK TESTS

The tube is subjected to a 75 g peak hafl sine-wave shock of 6 ± 2 ms duration. Six shock pulses are performed in each of two perpendicular directions, one of which shall be parallel to optical axis of the tube.

VIBRATION TESTS

The tube is vertically mounted with the photocathode end up and is subjected to sine wave vibrations of 1. 30 mm amplitude for a vibration cycle having a duration of 1 minute during which time the frequency is varied from 10 to 55 Hz and back to 10 Hz.

Ten frequency sweeps are performed in each of three mutually perpendicular directions, one of which shall be parallel to optical axis of the tube.

TEMPERATURE TESTS

The tube is subjected to a temperature cycle within + 52 °C to −54 °C range and is held at these maximum and minimum values during 2 hours.

NOTES

1 - Maximum illumination allowed for the photocathode in permanent operating condition. Intermittent illumination (duration less than 10 s) up to 15. 10^{-3} lux is allowed.

The tube should not be operated in daylight.

2 - The photocathode sensitivity is measured on a surface of π cm^2 with a flux of 0. 01 lumen.

At 800 nm and 850 nm the radiant sensitivity is measured with the incident light being filtered before falling on the photocathode. At 800 nm the interposed filter delivers 280 μW/lm and at 850 nm, it delivers 260 μW/lm.

3 - The luminance gain is measured at 10^{-4} lux incident illumination for a photocathode surface of π cm^2

4 - The center magnification Mc is defined as the ratio of the distance of two image points on the screen to the distance of the two corresponding points on the photocathode. The points on the photocathode are separated by a distance of 2 mm centered on tube axis.

5 - The peripheral magnification Mp is measured in the same conditions as stated above except that the distance between two points on the photocathode is 20 mm.

6 - The per-cent distortion D is defined by the equation :

$$D = \frac{Mp - Mc}{Mc} \times 100$$

THOMSON-CSF
GROUPEMENT TUBES ELECTRONIQUES

S 20 PHOTOCATHODE SPECTRAL RESPONSE
(with extended red sensitivity)

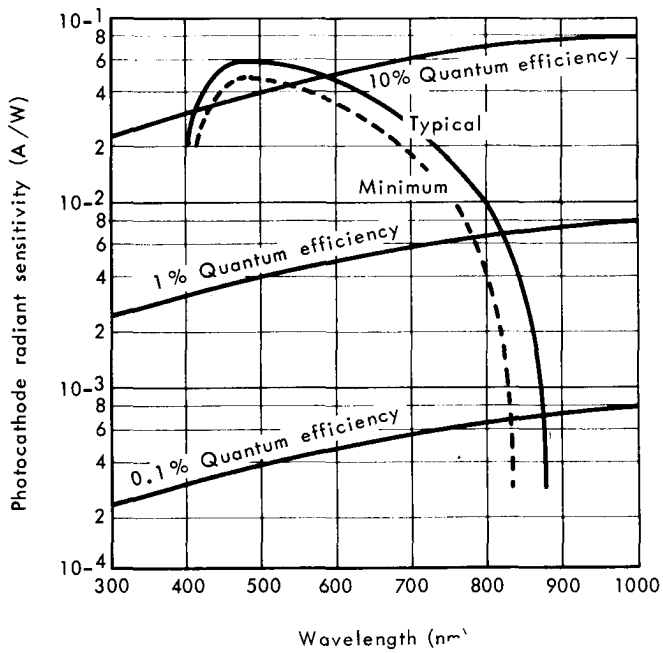

SPECTRAL EFFICIENCY CHARACTERISTICS OF
ALUMINIZED P20 PHOSPHOR SCREEN

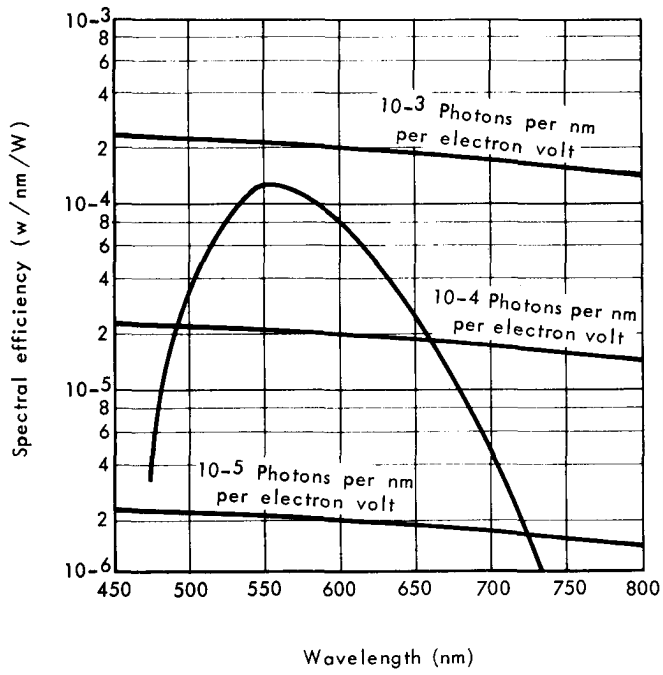

MODULATION TRANSFER FUNCTION

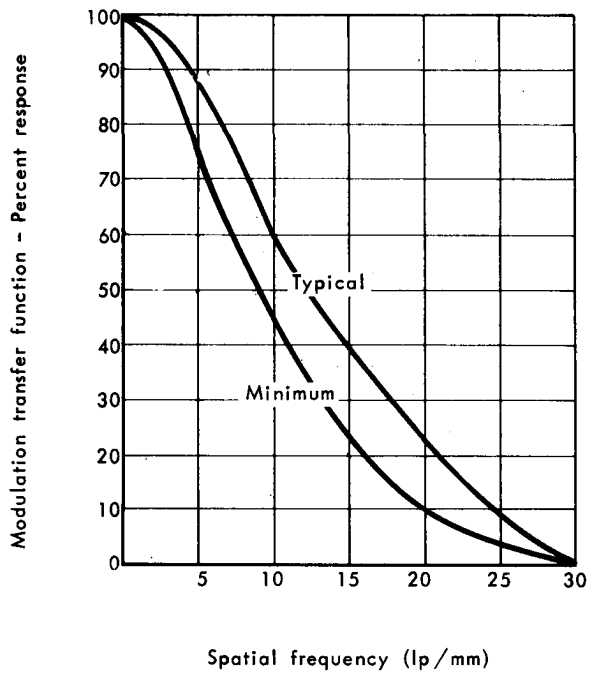

THOMSON-CSF
GROUPEMENT TUBES ELECTRONIQUES

OUTLINE DRAWING

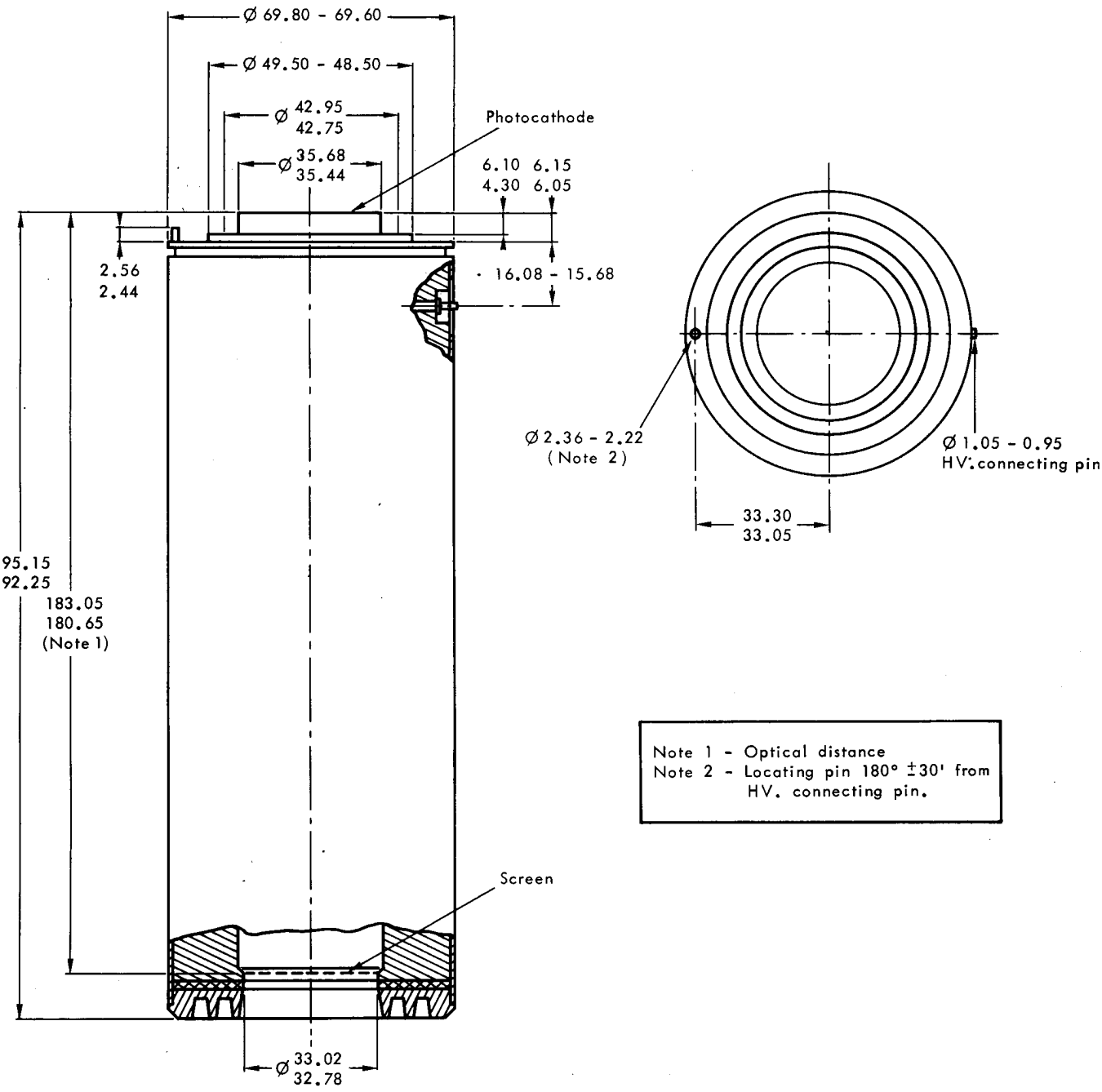

Note 1 - Optical distance
Note 2 - Locating pin 180° ±30' from HV. connecting pin.

Dimensions in mm.