ELECTRONIC ZOOM
X-RAY IMAGE INTENSIFIER TUBE TH 9426

HIGH RESOLUTION COMPACT TUBE

BRIGHTNESS GAIN : 6000 X

INPUT FIELDS : 22 cm (9") - 16 cm (6") - 11.5 cm (4.5")

TH 9426 is a 22 cm X-ray image intensifier which converts the X-ray pattern into a light image of high brightness and good contrast.

Technological improvements concerning input screen, electronoptics and viewing screen allow for higher resolution than that of older types TH 9421 A and TH 9423. Moreover, TH 9426 length is shorter by 8 cm than that of those older types.

In addition, TH 9426 has an adjustable magnification so to display to the user input fields of 22 cm - 16 cm and 11.5 cm. The image is delivered on the output screen with 20 mm diameter. Magnification can be adjusted from 1/5.5 - 1/8 to 1/11 by a proper choice of voltages applied to the three focusing electrodes. Output image luminance which is proportional to the energy gain of the intensifier and to the square of the electronic magnification varies from 1500 X - 3000 X to 6000 X.

The "active getter" provides a very high vacuum all along tube's life avoiding the development of an ion spot and alteration of contrast and resolution. The getter needs no extra installation and operates automatically as the tube is energized.

TH 9426 is delivered in a shell which permits mechanical mounting, protects the tube from stray magnetic field and secures a precise positioning of the associated optical system.

Applications

As a result of the high brightness gain it is possible to operate the tube with a very low input dose rate which reduces health hazards. This point is very important in medical radiology since this device enables a significant reduction of X-ray radiation as well on the patient as on the operator.

The high gain allows a good matching with television camera. Such an equipment enables examination of any part of the human body, which gives substantial improvement with respect to conventional X-ray examinations. Field of applications in industrial radiology are considerably extended by the use of the tube TH 9426 which allows the use of low power X-rays sources for non destructive testing of very opaque materials.

THOMSON-CSF
GROUPEMENT TUBES ELECTRONIQUES

GENERAL CHARACTERISTICS

Mechanical - (see note 1 and drawing)

The tube is delivered mounted in a metallic shell which permits mechanical fixation : nevertheless it is necessary to maintain the assembly by sustaining the entrance plane.

In this shell the tube is fixed so as to facilitate the precise localization of the optical device as regard to the reference plane. This shell protects the tube against stray magnetic field and cannot be considered as an efficient shield against X-radiations. A lead shield of 2 mm thick is provided at the output plane of the shell.

Dimensions	See drawing
Net weight, approximate	9 kg
Mounting position	any
Shipment position	tube axis horizontal
Operating and stocking temperature. max.	+50 °C
min.	+ 5 °C

Optical

Input screen diameter	22 ± 0. 5 cm
Output image diameter (O. I.)	20 ± 0. 5 mm
Input spectral response	X-rays (30 to 250 kVp generator)
Viewing screen	
Type	P 20 (λ = 520 nm)
Fluorescence and phosphorescence	Yellow - green
Electrostatic focus - Inverted image	

Operating modes :	Normal	Magn. 1	Magn. 2	
Input field diameter	22	16	11. 5	cm
Magnification	1/11	1/8	1/5. 5	
Minimum resolution (note 2)				
- central	18	20	22	lp/cm
- peripheral	16	18	20	lp/cm
Minimum contrast (note 3) measured with JEDEC penetrameter	3	2. 5	2	%
Minimum conversion factor (note 4)	70	35	18	Cd/m^2 per mR/s
or	350	175	90	ft. L per R/mn
Minimum luminance gain (note 5)	6000	3000	1500	
Maximum background luminance (note 6)	0. 06	0. 06	0. 06	Cd/m^2
or	0. 02	0. 02	0. 02	ft. L
Maximum distortion (note 7)	30	15	10	%
Maximum persistence at 10 ms (note 8)	10	10	10	%

MAXIMUM RATINGS AND TYPICAL OPERATION

Maximum ratings

Photocathode C voltage		0	V
Electrode g1 voltage		0. 50	kV
Electrode g2 voltage		3. 0	kV
Electrode g3 voltage		11. 0	kV
Anode A		32	kV
Active getter voltage	(anode g4	3. 5	kV
	(cathode E	0	V
Photocathode C maximum current		0. 5	µA
Electrode g1 maximum current		5	µA
Electrode g2 maximum current		1	µA
Electrode g3 maximum current		1	µA
Electrode g4 maximum current (after post-gettering operation)		10	µA
Anode A maximum current		2	µA

Typical operation (see starting procedures)

Operating modes :		Normal	Magn. 1	Magn. 2	
Input diameter for 20 mm O.I.		22	16	11. 5	cm
Photocathode C voltage		0	0	0	V
Electrode g1 voltage *		0 to 250	0 to 250	0 to 250	V
Electrode g2 voltage *		450 to 850	300 to 700	300 to 700	V
Electrode g3 voltage *		3. 2	5. 7	10	kV
Anode A voltage		28 to 30	28 to 30	28 to 30	kV
Active getter voltage	(anode g4	2. 5 to 3	2. 5 to 3	2. 5 to 3	kV
	(cathode E	0	0	0	V

Ripple voltage must not exceed 0. 5 %

** g1 g2 g3 voltages are defined for an anode voltage of 30 kV.*

THOMSON-CSF
GROUPEMENT TUBES ELECTRONIQUES

STARTING PROCEDURE

Important

For tube handling, always prescribe use of security goggles (implosion risk).

Tube mounting

Set tube inside a proper metallic housing to protect operator against X-radiation.

Check for darkness of the tube housing (would the tube be checked without container, it should then be placed in a completely dark room).

The housing in which the tube is contained must be humidity proof and deshydrated. This condition is necessary to eliminate all moisture which could initiate coronas and sparks detrimental to tube operation. Moreover, it prevents dust electrostatic attraction on the viewing face.

Connections

All the connections necessary for tube supply (even for the anode) are made through flexible wires with reference marks.

A 10 Megohms resistance protecting the tube against discharge is provided inside the shell in the anode circuit. Time constant thus produced with tube capacitance contributes to ripple voltage filtering.

In series between each voltage supply and corresponding tube connection, insert in the same way a few Megohms protective resistance.

Focusing adjustments

Voltages supplies can be applied to the electrodes in a short time but with a slope not exceeding 5 kV/ms.

Let tube at rest with voltages applied for potential stabilization before adjusting it. (10 s minimum).

Set a 2 mm spaced metallic wire mesh of 5/10 mm diameter or equivalent (stainless steel, copper) in front of the tube and apply X-rays beam.

For each selected operating mode, electrode g3 voltage must be predetermined, the value of which should be within the limits specified in typical operation. For example g3 = 3. 2 kV for normal mode, g3 = 5. 7 kV for magnified mode 1 and g3 = 10 kV for magnified mode 2.

Electrode g3 voltage being selected, adjust electrode g1 and g2 voltages within the specified range. The focusing adjustment shall be made as follows :

- Adjust g1 voltage in order to obtain an image as homogeneous as possible in luminance.
- Adjust g2 voltage in order to obtain the optimum resolution.
- Optimize g1 voltage if necessary.

Focusing adjustments are made respectively for "normal mode", "magnified mode 1" and "magnified mode 2".

REMARK - Typical operation voltages correspond to selected operating mode of 22 cm - 16 cm and 11.5 cm. For particular use, any input field between 22 cm and 11.5 cm can be selected : please contact manufacturer for information.

Gettering operation

In order to assure a high reliability in operation and to maintain optimum performances of the tube, Instructions for Gettering operation should be strictly applied as defined in separate Data TEV 3006.

The purpose of this operation is to pump residual gas in the tube resulting in an ion spot which lowers the image contrast and resolution.

NOTES

(1) - The mounting of the tube in its shell (see page 2 and drawing) secures the positioning of the viewing screen at a determined optical distance from the mechanical plane of reference on which may be fixed the optical system. This distance is 20 mm ± 0.25. This shell assures a parallelism of the two planes with a precision higher than 1/800 radian. It assures a center of image within 0.5 mm from perpendicular axis of the reference plane defined by an aperture of 120.10 ± 0.05 mm diameter.

(2) - The resolution (as referred to input screen) is measured by using square lead pattern consisting in alternate black and white lines of equal width. Any two adjacent lines are designated as a line pair. The impinging X-radiation is produced by a generator operating at 65 kV and with a 2.5 mm aluminum filter. The resolution decreases gradually from the center to the edge of image. The central zone is within a circle having a diameter equal to 70 % of the input diameter. Peripheral zone is within circles 70 and 90 % of the input diameter.

(3) - The contrast is defined as the differential thickness which can be detected when using a JEDEC penetrameter. This penetrameter consists in an aluminum disc of 20 mm thickness presenting holes of 6 mm diameter. The depth of those holes vary from 1.5 to 7 % of the thickness of the disc. The differential thickness (expressed in %) of the hole having the minimum depth which can be detected defines the minimum contrast. X-ray conditions : 80 kVp - HVL 7 ± 0.2 mm Al-input dose rate 20 mR/mn.

(4) - The conversion factor is the value of the viewing screen luminance corresponding to a determined X-ray dose rate.
X-ray conditions : 80 kVp - 20 mm Al filter - HVL 7 ± 0.2 mm Al.
The luminance is measured by a photometer which matches the human vision.
The conversion factor is defined as :

$$\text{C. F.} = \frac{\text{Luminance}}{\text{dose rate}} = \frac{\text{Candela/square meter}}{\text{milli Roentgen/second}} \text{ or } \frac{\text{foot Lambert}}{\text{Roentgen/minute}}$$

(5) - The luminance gain is the ratio of luminance of the image intensifier to the luminance of a Massiot - Fluor - Sirius fluoroscopic screen having a luminance of 0.012 cd/m^2 per mR/s. Both are irradiated in the same conditions : 80 kVp - 20 mm Al filter - HVL 7 ± 0.2 mm Al. The luminance is measured by a photometer which matches the human vision.

(6) - The background luminance is the luminance of output screen when normal operating voltages are applied to the tube and X-rays are off at normal ambient temperature.

(7) - The distortion is measured by putting an object of 1 cm length at the center and then at the edge of the field. The dimensions of the images measured on the viewing screen are respectively l_1 and l_2. The distortion is given by :

$$D = \frac{l_2 - l_1}{l_1}$$

(8) - The image persistence is the residual luminance measured at a determined time after removal of X-ray radiations.

THOMSON-CSF
GROUPEMENT TUBES ELECTRONIQUES

OUTLINE DRAWING

ELECTRICAL CONNECTIONS		
Cathode	C	Black
Electrode	g1	Black
Electrode	g2	Black
Electrode	g3	Black
Getter (+)	g4	Black
Getter (-)	E	Blue
Earth	G	Black
Anode	A	White

Cable length 450 about

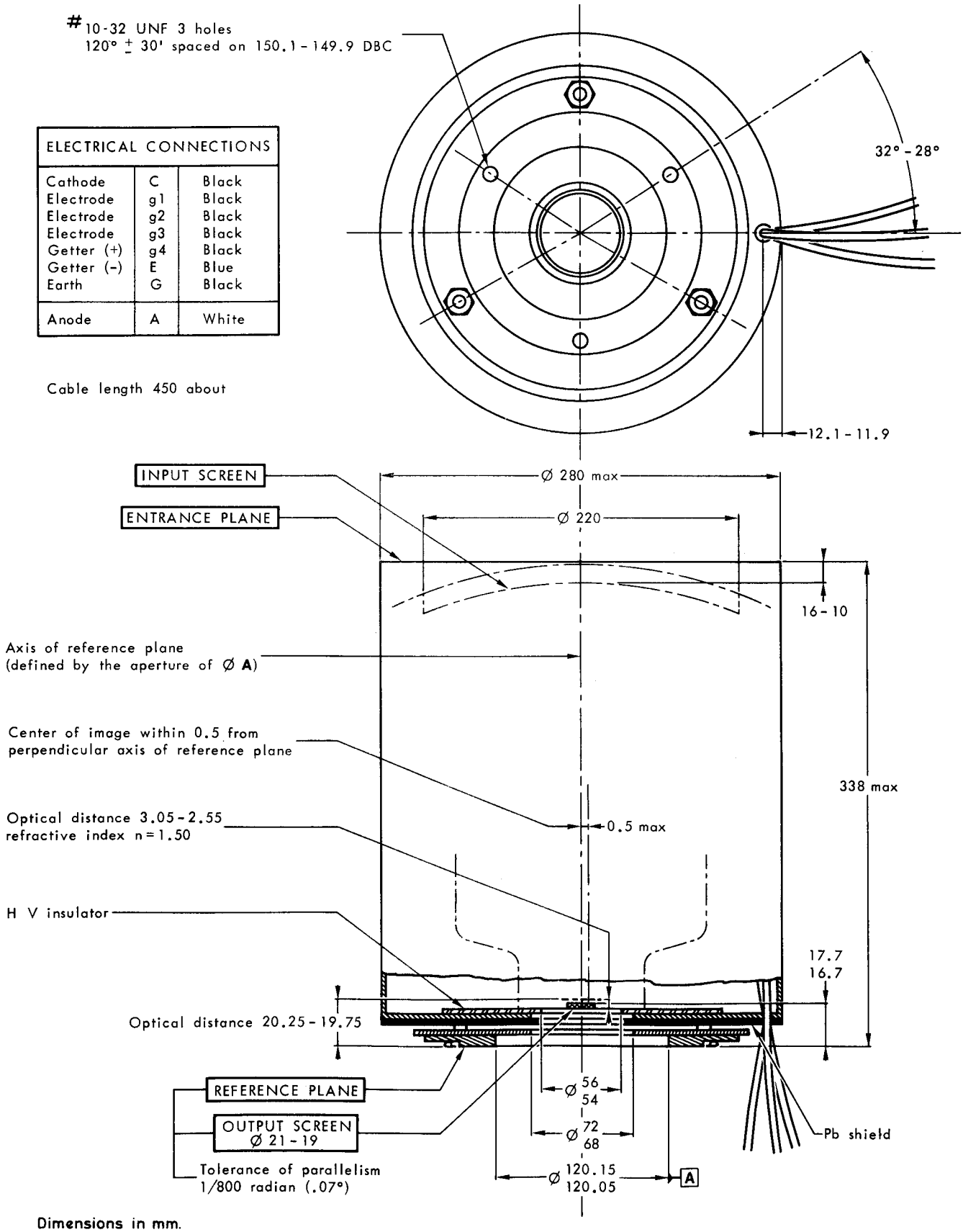

Dimensions in mm.