TH 9412B

X-RAY IMAGE INTENSIFIER TUBE

- INPUT FIELD : 16 cm
- OUTPUT IMAGE NOMINAL DIAMETER : 14. 2 mm
- HIGH RESOLUTION - HIGH CONTRAST
- LUMINANCE GAIN : 10 000

The TH 9412B is a X-ray image intensifier tube which converts the X-ray pattern into a light image of high brightness and good contrast.

The X-ray beam emerging from the subject being examined first passes through the tube's input window, made up of special low absorption glass. Next, the X-rays reach the input fluorescent screen where the X-ray photons are converted to light photons. A photocathode, coupled to the input screen is excited by these light photons, which are thus converted to electrons. The emitted electrons are accelerated and focused by appropriate electric fields and then impinge on the output fluorescent screen. This screen's phosphor coating reconverts the electrons back to light photons providing an exceptionnally bright output image. This brightness gain is obtained partly from the energy imparted to the electrons during their acceleration and partly from the reduction in diameter of the tube's output image as compared to the input image. In fact, this image is several thousand times brighter than would have been that of a conventional radioscopic screen substituted for the tube's input window.

Many improvements in the design of the TH 9412B have benifited from THOMSON-CSF wide experience and considerable expertise in the field of X-ray image intensifier tubes. The TH 9412B has the same dimensions and electrode voltages as the previous model TH 9412A ; it can directly replace the latter with improved image performance.

The TH 9412B uses the caesium iodide (CsI) base as the detector screen material which associates an improved absorption of the incident radiation to a fast time response.

The P20 phosphor is selected in order that its spectral response coincides with the optimum correction range of the optical systems thus minimizing the reflections and loss of resolution and contrast in these optical systems ; on the other hand, the P20 phosphor is matched to 35 mm film, 100 or 70 mm spot films or to CCTV camera tubes.

The "dark output screen" also enables to minimize all light reflection (internal or due to the optical system) and thus improves the image contrast.

The TH 9412B incorporates an automatic "active getter" which ensures a very high vacuum along tube's life avoiding the development of an ion spot or alteration of contrast resolution.

Power supply

Since the TH 9412B performs very high resolution, the power supply must be carefully designed and especially ripple voltages must not exceed 0. 3 %.

The TH 7127 THOMSON-CSF power supply designed especially for use with the TH 9412B is highly recommended. It delivers 0. 1 % regulated voltages for all electrodes and is directly energized from 110/220 V - 50/60 Hz line supply.

GENERAL CHARACTERISTICS

Mechanical (see Note 1 and drawing)

The tube is delivered in a metal housing which ensures the function of mechanical support ; nevertheless, it is necessary to maintain the assembly by sustaining the entrance plane.

In this housing, the tube is mounted so as to facilitate the precise location of the optical devices as regard to the reference plane. This shell protects the tube against stray magnetic field and cannot be considered as an efficient shield against X-radiations. A lead plate of 2 mm thickness is provided at the output plane of the housing.

Aluminum housing

The tube can be optionally provided in an aluminum housing including lead and mumetal lining.

In this version, it provides personel protection which satisfies the most rigorous international regulations. It also permits the direct mounting of the tube on the equipment by means of the output plane.

Operating position	any	
Shipment position	tube axis horizontal	
Operating and storage temperature :		
- maximum	+50	°C
- minimum	+ 5	°C
Net weight, approx.	4. 5	kg
Dimensions	see drawing	

Optical

Input screen diameter	16 ± 0. 5	cm
Output image diameter	14. 2 ± 0. 5	mm
Input screen spectral response	X-rays 30 to 250 kVp generator	
Veiwing screen :		
- type	P20 (λ max. = 520 nm)	
- fluorescence and phosphorescence	yellow - green	
Electrostatic focus - Inverted image :		
Input field diameter	16	cm
Magnification	1/11	
Typical resolution (Note 2) :		
- central	38	lp/cm
- peripheral	34	lp/cm
Detection sensitivity (Note 3) measured with JEDEC - penetrometer	2. 1	%
Typical contrast ratio (Note 4)	11/1	
Minimum conversion factor (Note 5)	100	$\frac{cd/m^2}{mR/s}$
or	500	$\frac{fL}{R/mn}$
Minimum luminance gain (Note 6)	10 000	
Maximum background luminance (Note 7)	0. 06	cd/m^2
or	0. 02	fL
Maximum distortion (Note 8)	10	%
Maximum persistence at 10 ms (Note 9)	10	%

OPERATING CONDITIONS

Maximum ratings

Photocathode pc voltage	0	V
Electrode g1 voltage	0. 3	kV
Electrode g2 voltage	4. 0	kV
Anode a voltage	32. 0	kV
Active getter voltage :		
- anode g4	3. 5	kV
- cathode k	0	V
Photocathode pc maximum current	0. 5	µA
Electrode g1 maximum current	1	µA
Electrode g2 maximum current	1	µA
Electrode g4 maximum current (after post-gettering operation)	10	µA
Anode a maximum current (without X-radiation)	2	µA

Typical operation

Input diameter for 14. 2 mm output image	16	cm
Photocathode pc voltage	0	V
Electrode g1 voltage*	150 to 300	V
Electrode g2 voltage*	2700 to 3700	V
Anode a voltage	30. 0	kV
Active getter voltage :		
- anode g4	2. 5 to 3. 0	kV
- cathode k	0	V

Ripple voltages must not exceed 0. 3 %.

* g1, g2 voltages are given for an anode voltage of 30. 0 kV.

STARTING PROCEDURE

Important

For tube handling, always prescribe use of security goggles (implosion risk).

Tube mounting

Set tube inside a proper metal housing to protect operator against X-radiation.

Check for darkness of the tube housing (would the tube be checked without container, it should then be placed in a completely dark room).

The housing in which the tube is contained must be humidity proof and deshydrated. This condition is necessary to eliminate all moisture which could initiate coronas and sparks detrimental to tube operation. Moreover, it prevents dust electrostatic attraction on the viewing face.

Connections

All the connections necessary for tube supply are made through flexible wires with color reference marks.

A 10 Megohms resistance protecting the tube against discharge must be inserted in series in the anode circuit inside the housing. Time constant thus produced with tube capacitance contributes to ripple voltage filtering.

In series between each voltage supply and corresponding tube connection, insert in the same way a few Megohms protection resistance.

Electrode voltages

The tube is delivered with an individual Test Report giving the optimum focus voltages measured in factory.

It may occur that the given values do not give the optimum focus because of the measurement instrument calibration errors. As the tube features very high resolution performance, a variation of electrode voltages of 1 % can alter the image quality.

It results from this remark that it is recommended to adjust the tube voltages as follows in order to obtain the best focus.

Focusing adjustments

- Voltages supplies can be applied to the electrodes in a short time but with a slope not exceeding 5 kV/ms.
- Let tube at rest with voltages applied for potential stabilization before adjusting it. (10 s minimum).
- Set a 0. 2 mm spaced metal wire mesh of 2/10 mm diameter (stainless steel, copper) in front of the tube and apply X-rays beam.
- Apply electrode voltages given in Test Report.
- Adjust g1 voltage in order to obtain an image as homogeneous as possible in luminance.
- Adjust g2 voltage in order to obtain the optimum resolution.
- Optimize g1 voltage if necessary.
- Electrode voltages in the Test Report are given for an anode voltage of 30 kV. If the tube is operated at a lower anode vóltage, the adjustment process is identical except that the voltages of the other electrodes must be consequently reduced.

Gettering operation

In order to assure a high reliability in operation and to maintain optimum performances of the tube, Instructions for Gettering operation should be stricty applied as defined in a separate Data.

The purpose of this operation is to pump residual gas in the tube resulting in an ion spot which lowers the image contrast and resolution.

NOTES

1 - **The mounting** of the tube in its housing (see page 2 and drawing) secures the positioning of the viewing screen at a determined optical distance from the mechanical pilot plane on which may be fixed the optical system. This distance is 20 ± 0.25 mm. This housing assures a parallelism of the two planes with a precision higher than 1/800 radian. It assures a center of image within 0.50 mm from perpendicular axis of the pilot plane defined by an aperture of 120, 10 ± 0. 05 mm diameter.

2 - **The resolution** (as referred to input screen) is measured by using square lead pattern consisting of alternate black and white lines of equal width. Any two adjacent lines are designated as a line pair. The impinging X-radiation is produced by a generator operating at 65 kV and with a 2.5 mm aluminum filter. The central resolution is given for 70 % of the input field diameter and the peripheral resolution is given for the area between circles of 70 % and 90 % of the input field diameter.

3 - **The detection sensitivity** is defined as the differential thickness which can be detected when using a JEDEC penetrometer. This penetrometer consists in an aluminum disc of 20 mm thickness presenting holes of 6 mm diameter. The depth of those holes vary from 1.5 to 7 % of the thickness of the disc. The differential thickness (expressed in %) of the hole having the minimum depth which can be detected defines the minimum contrast. X-ray conditions : 80 kVp - HVL 7 ± 0. 2 mm Al-input dose rate 100 mR/mn.

4 - **The contrast ratio** is measured by inserting a lead disc of 6 mm thickness in the center of the tube's input field and covering 10 % of the input field. The contrast ratio is expressed by the ratio $CR = \frac{B_2}{B_1}$

where : B_1 = luminance of the viewing screen measured at the center of the disc.
B_2 = luminance of the viewing screen measured on the light area.

5 - **The conversion factor** is the value of the viewing screen luminance corresponding to a determined X-ray dose rate.

X-ray conditions : 80 kVp - 20 mm Al filter - HVL 7 ± 0. 2 mm Al.
The luminance is measured by a photometer which matches the human vision.
The conversion factor is defined as :

$$C.F. = \frac{\text{Luminance}}{\text{dose rate}} = \frac{\text{Candela/square meter}}{\text{milli Roentgen/second}} \quad \text{or} \quad \frac{\text{foot Lambert}}{\text{Roentgen/minute}}$$

6 - **The luminance gain** is the ratio of luminance of the image intensifier to the luminance of a PATERSON - CB2 type fluoroscopic screen. Both are irradiated in the same conditions : 80 kVp - 20 mm Al filter - HVL 7 ± 0.2 mm Al. The luminance is measured by a photometer which matches the human vision.

7 - **The background luminance** is the luminance of output screen when normal operating voltages are applied to the tube and X-rays are off at normal ambient temperature.

8 - **The distortion** is measured by $D = \frac{M_p - M_c}{M_c} \times 100$

where : M_p = magnification measured on a circle covering 90 % of the input field.
M_c = magnification measured on a 2 cm diameter circle centered on the input field.

9 - **The image persistence** is the residual luminance measured at a determined time after removal of X-radiation.

OUTLINE DRAWING

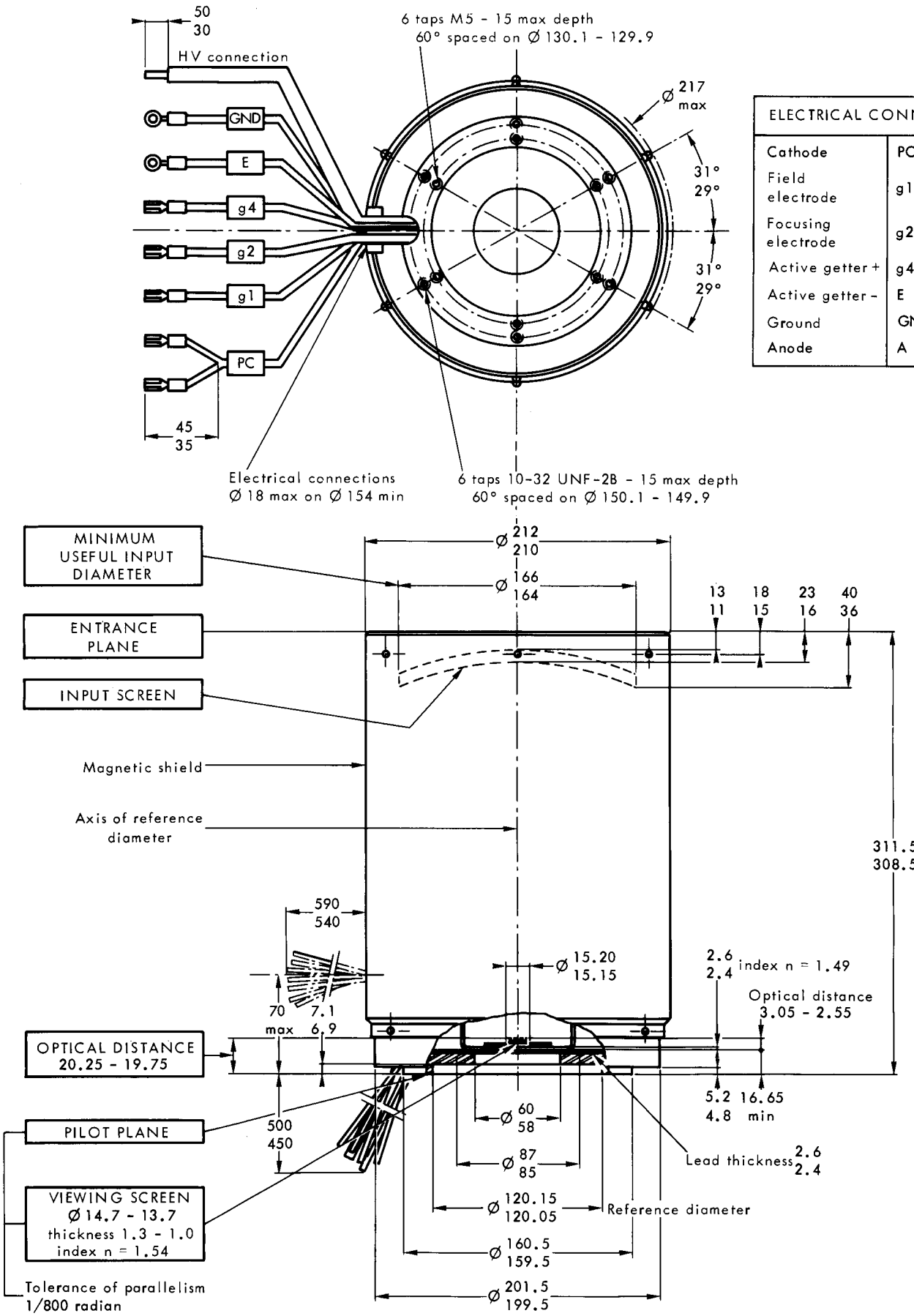

ELECTRICAL CONNECTIONS		
Cathode	PC	Black
Field electrode	g1	Green
Focusing electrode	g2	Black
Active getter +	g4	Black
Active getter -	E	Blue
Ground	GND	Grey
Anode	A	White

Dimensions in mm.

THOMSON-CSF

DIVISION TUBES ELECTRONIQUES