THOMSON-CSF
DIVISION TUBES ELECTRONIQUES

DATA TE
TH 35
August 1975 -

TH 3523
HIGHLY LINEAR 14-GHz TWT
FOR SATELLITE-COMMUNICATIONS EARTH STATIONS

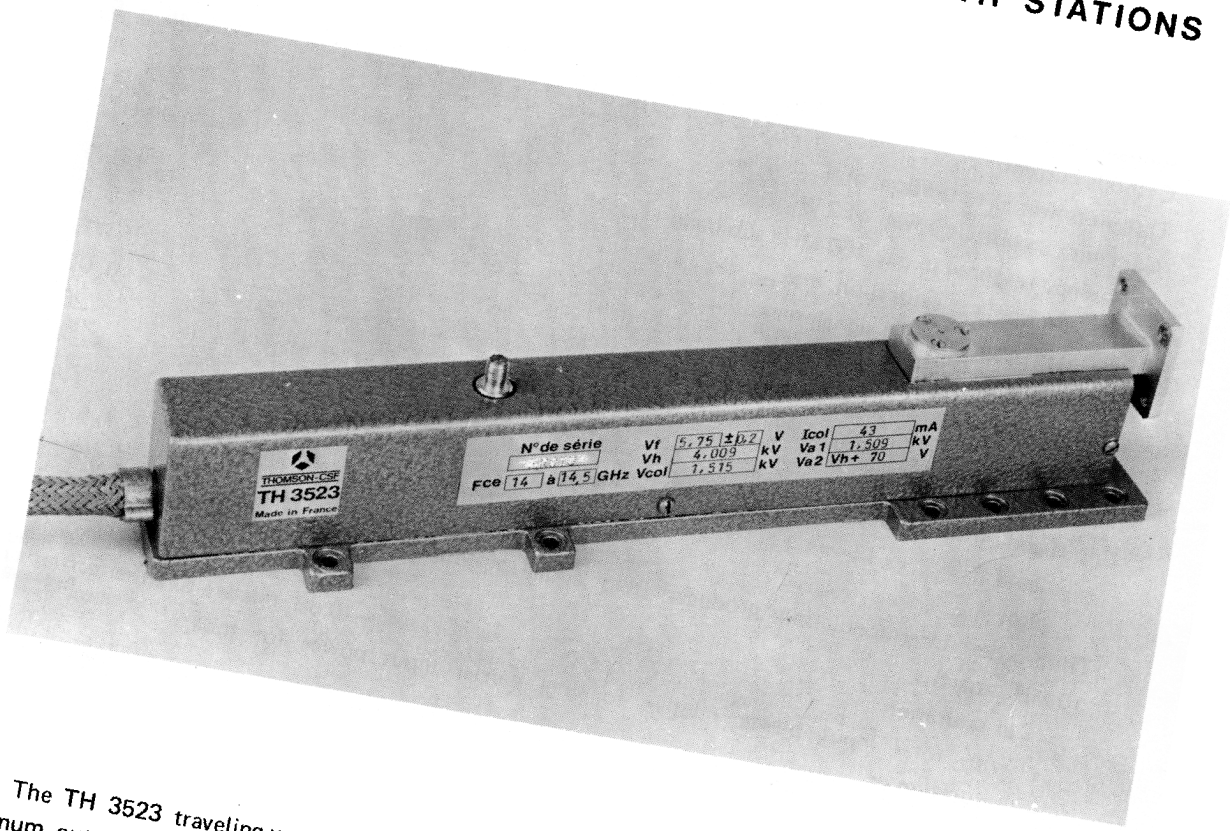

The TH 3523 traveling-wave tube (TWT) can be used either as a medium-power amplifier, delivering a minimum output power at saturation of 20 watts, or as a driver for the high-power TH 3517 TWT, to form a 2-kW uplink transmitter for next-generation satellite-communications earth stations. Operating in the 14-GHz band, but using much of the proven technology of THOMSON-CSF's well-known 12-GHz space tubes, the TH 3523 represents the latest advance in the helix-TWT state of the art.

Having extraordinary linearity of transmission characteristics when used as a driver (small-signal operation), the TH 3523 TWT is ideal for the first stage of a multicarrier transmitter. Its gain variation in small-signal operation will not exceed ± 0.3 dB over any 100-MHz sub-band within the 500-MHz operating bandwidth.

By retaining the proven electron-gun cathode and collector designs of our space tube, the TH 3523 is assured of long operating life and exceptional reliability. At the same time, the redesigned helix reflects a cost-effective solution for operation of an earth-based tube in the 14 to 14.5 GHz range. The RF input of the tube is coaxial, while the output is via waveguide.

The TH 3523 can be delivered with a matched solid-state power supply, designed to power and protect the tube with high reliability. For more details, refer to the Data Sheet for the TWT + power supply combination, known as the TH 20133 TWT amplifier. The TWTA operates from non-regulated 36 - 72 Vdc supply.

GENERAL CHARACTERISTICS

Electrical

Operating frequency range	14 - 14.5	GHz
Heater voltage	5.50	V
Heater current	0.65	A
Anode voltage	1300 ± 300	V
Helix voltage	3950 ± 150	V
Collector voltage	1500	V
Cathode current	45 ± 5	mA
Output power at saturation, min.	20	W
Gain with an output power of 2 W	55 to 61	dB
Frequency response in any 100-MHz sub-band :		
- gain ripple at saturation, max.	± 0.1	dB
- gain ripple in small-signal, max.	± 0.3	dB
- gain slope at saturation	⩽ 0.005	dB/MHz
- gain slope in small-signal operation	⩽ 0.02	dB/MHz
Noise factor	< 28	dB
AM/PM Conversion	< 4	°/dB
Input and output VSWR :		
- cold	< 1.5 : 1	
- hot	< 2 : 1	

Third-order intermodulation products (two equal-amplitude carriers, at least 10 MHz apart) :

- at saturation	< −10 dB, relative to either carrier's output level	
- with total input power relative to single-carrier input power for tube saturation of	− 6 dB	− 15 dB
- the 3rd-order IM level is at least (below either carrier's output power)	− 15 dB	− 20 dB

Mechanical

Weight, approx.	850 grams
Dimensions	291 x 50 x 65 mm
RF Connections :	
- input	Female SMA type
- output	RG 91/U waveguide UG 419/U flange
Power-supply connections	Flying leads
Cooling	By conduction

ABSOLUTE RATINGS

(Non-simultaneous)

	Min.	Max.	Units
Heater surge current	–	1	A
Heater voltage	$V_f - 0.2$	$V_f + 0.2$	V
Warm-up time	180	–	s
Frequency	12.4	16	GHz
Anode current	–1	+1	mA
Drive power	–	–5	dBm
Helix voltage, V_H nominal	–250	+250	V
Load VSWR	–	2 : 1	
Collector voltage	1400	1850	V
Collector dissipation	–	130	W
Baseplate temperature	–45	+85	°C
Helix current	–	2.0	mA
Collector current	–	55	mA

TYPICAL OPERATION

Frequency	14.2	GHz
Output power	22	W
AM/PM Conversion	3	°/dB
Gain, at saturation	52	dB
Maximum gain variation at saturation over the 500-MHz bandwidth	< 0.1	dB
Small-signal gain, 10-dB backoff	58	dB
Maximum small-signal gain variation over the whole band, 10-dB backoff	0.8	dB
Heater voltage	5.5	V
Heater current	0.64	A
Cathode current	47	mA
Anode voltage	1370	V
Helix voltage	3900	V
Helix current	1	mA
Collector voltage	1500	V

Third-order intermodulation products :

- with 2 equal-amplitude carriers driving the TWT to saturation ..... < –10 dB, relative to either carrier's output level

SMALL SIGNAL GAIN
P_{in} = -30 dBm (constant)

POWER AND GAIN, AT SATURATION
P_{in} = -12.5 dBm (constant)

Vh = 3900 V Vc = 1500 V
Va = 1370 V Ic = 47 mA

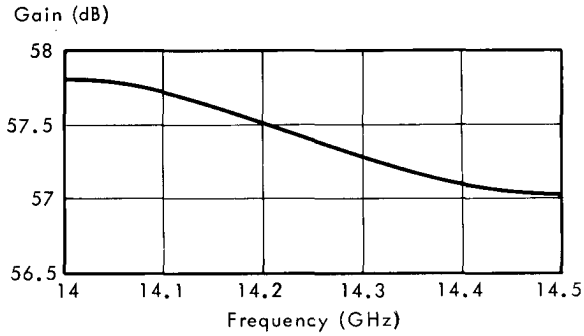

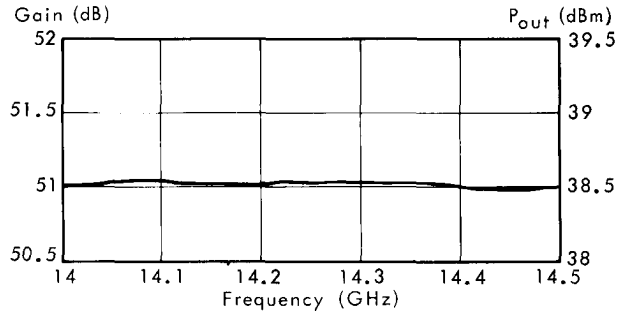

OUTLINE DRAWING

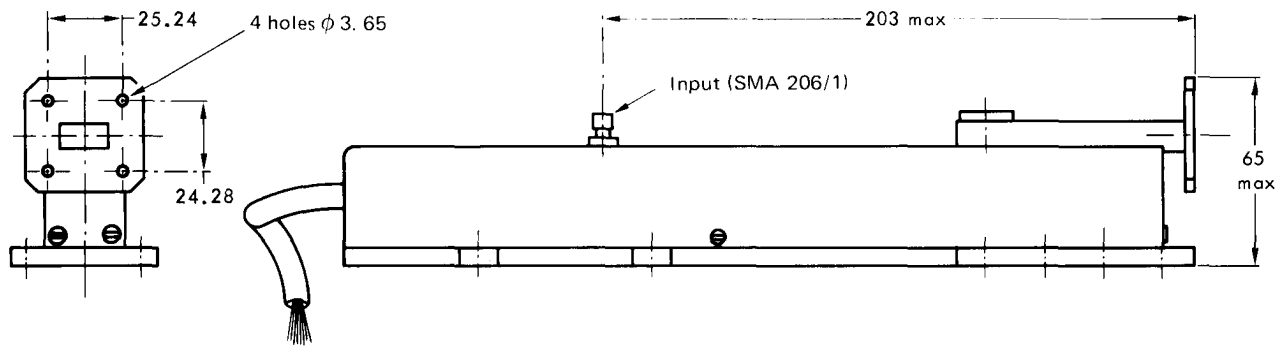

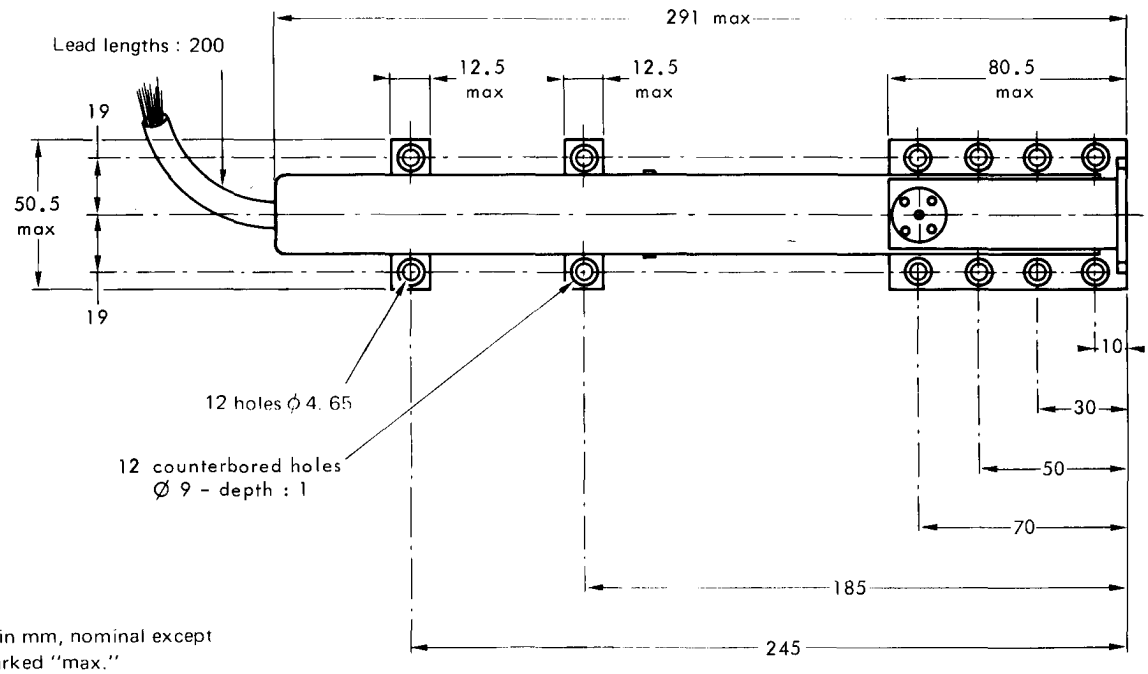

Dimensions in mm, nominal except for those marked "max."