TH 3521
TRAVELING WAVE TUBE

- Designed for advanced line-of-sight microwave links, carrying up to 1800 telephone channels
- Flat gain/frequency curve
- Exceptional noise characteristics
- Delivers 20 W of carrier power with 3 dBm drive power
- Incorporates long-life space-TWT technology and gives high efficiency
- PPM-focused and cooled by simple conduction

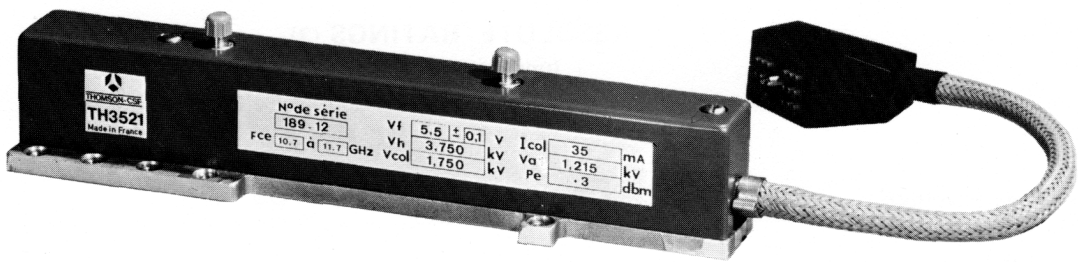

Description

The TH 3521 traveling wave tube has been developed to serve as the power amplifier in new, high-capacity microwave links over line-of-sight routes. Able to amplify a signal carrying up to 1800 telephone channels, television, or high bit-rate data, this TWT is designed to operate in the 10.7 - 11.7 GHz band. Its nominal output power is 20 watts, and its nominal drive power 3 dBm. The operating band can be appreciably enlarged with a small output power reduction.

An important feature of this new tube is its low noise figure, which does not exceed 27 dB. This superior noise performance is achieved with an impregnated-tungsten cathode, of the type developed for our satellite-carried TWT's. The consequences for the expected reliability and long-life capability of the TH 3521 are obvious.

It also has a nearly flat gain characteristic and a very low AM/PM conversion coefficient (4 °/dB). Employing PPM beam focusing, the TH 3521 is fully cooled by simple conduction alone.

Adjustment of the electrical parameters of this TWT is made extremely simple ; the heater, helix and collector voltages and the drive power level being fixed. Only the anode voltage is changed to obtain the desired output-power level, by varying the cathode current. Consequently, TWT installation or replacement is easy to accomplish.

This state-of-the-art TWT is also available with a matched solid-state power supply in a compact, adjustment-free TWTA configuration, the TH 21521, eliminating all tube/power supply interface problems for the equipment designer. Contact THOMSON-CSF, Electron Tube Division for more information.

GENERAL CHARACTERISTICS (1)

Electrical (2)

Operating frequency range	10. 7 - 11. 7	GHz
Output power	20	W
Drive power	3	dBm
Noise factor, max.	27	dB
AM/PM conversion coefficient, max.	4	°/dB
Heater voltage	5. 5	V
Helix voltage	3. 75	kV
Anode 0 voltage	1. 3	kV
Anode 1 voltage	Vh + 50	V
Collector voltage	1. 75	kV

Mechanical

Operating position	Any
Dimensions	See the Outline Drawing
Weight, max.	700 g
RF connections	SMA connectors
Power-supply connections	Shielded cable
Cooling	By conduction

ABSOLUTE RATINGS (3)

(non-simultaneous)

	Min.	Max.	Units
Heater voltage	5. 3	5. 7	V
Heater current	0. 4	0. 8	A
Heater surge current	–	1	A
Warm-up time	3	–	mn
Helix voltage	3. 5	4. 0	kV
Helix current	–	2. 5	mA
Anode 0 voltage	–	1. 4	kV
Anode 1 voltage	–	Vh + 0. 1	kV
Anode 1 current	– 1	+ 1	mA
Anode 0 current	– 0. 5	+ 0. 5	mA
Collector voltage	1. 6	2. 0	kV
Collector current	–	50	mA
Collector dissipation	–	90	W
Drive power	–	20	mW
Load VSWR	–	2 : 1	
Operating temperature	– 20	+ 100	°C
Storage temperature	– 40	+ 70	°C

(1) Values based on performance tests and may be modified without notice due to product improvement or later information. THOMSON-CSF, Electron Tube Division, should be consulted prior to making use of this information for equipment design.

(2) All voltages referred to the cathode.

(3) No one value ever to be exceeded, even under transient conditions, and operation at more than one absolute rating at the same time may cause tube damage. Equipment must be designed so that these limits are never exceeded.

TYPICAL OPERATION

Operating frequency	11. 2	GHz
Drive power	3	dBm
Output power	20	W
Gain	40	dB
Anode 0 voltage	1. 2	kV
Anode 1 voltage	3. 8	kV
Helix voltage	3. 75	kV
Helix current	1	mA
Collector voltage	1. 75	kV
Collector current	35	mA
Noise factor	25	dB
AM/PM conversion coefficient	2. 5	°/dB

OUTLINE DRAWING

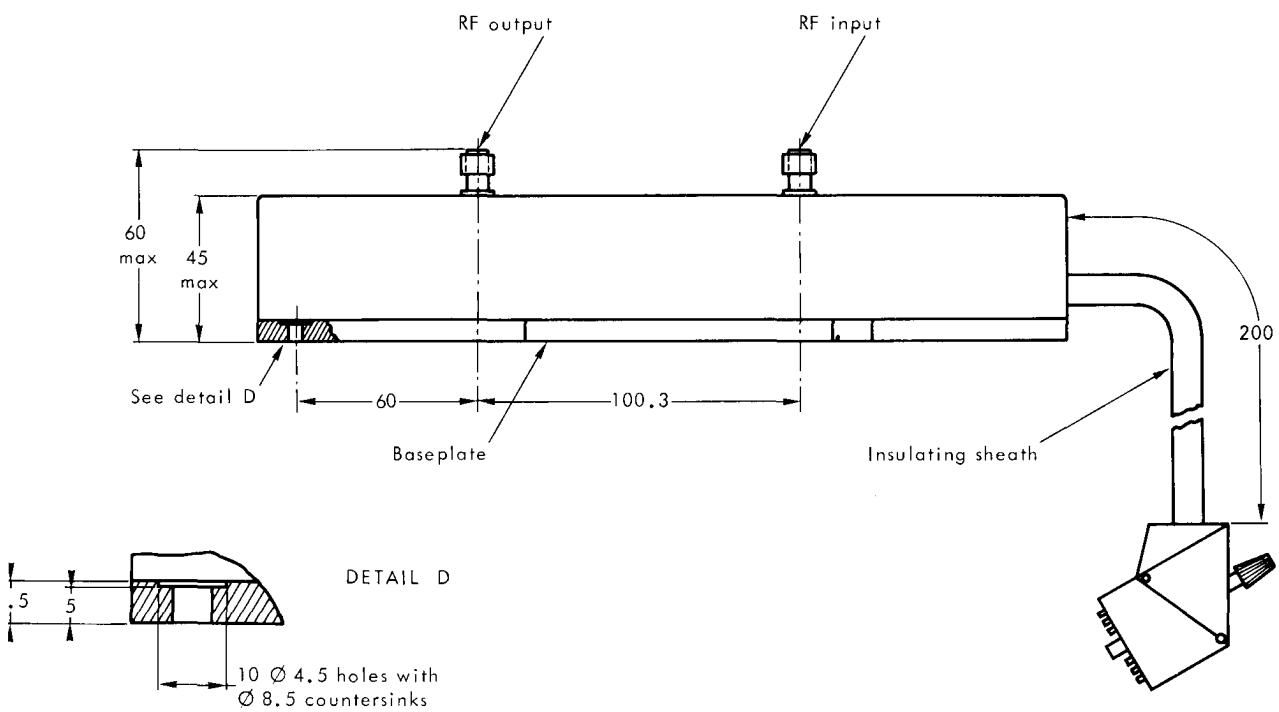

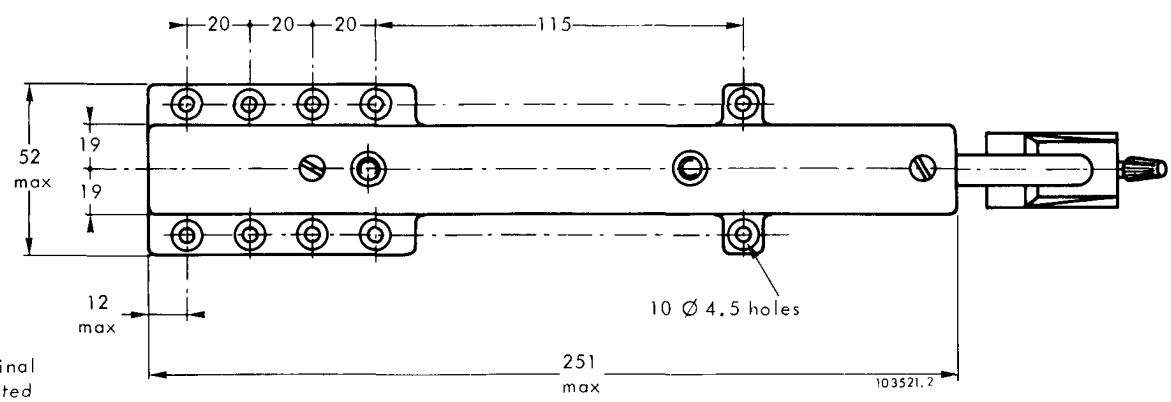

Dimensions in mm, nominal
unless otherwise indicated

THOMSON-CSF

DIVISION TUBES ELECTRONIQUES