TH 3084-TH 3085
TUNABLE HIGH-POWER S-BAND MAGNETRONS

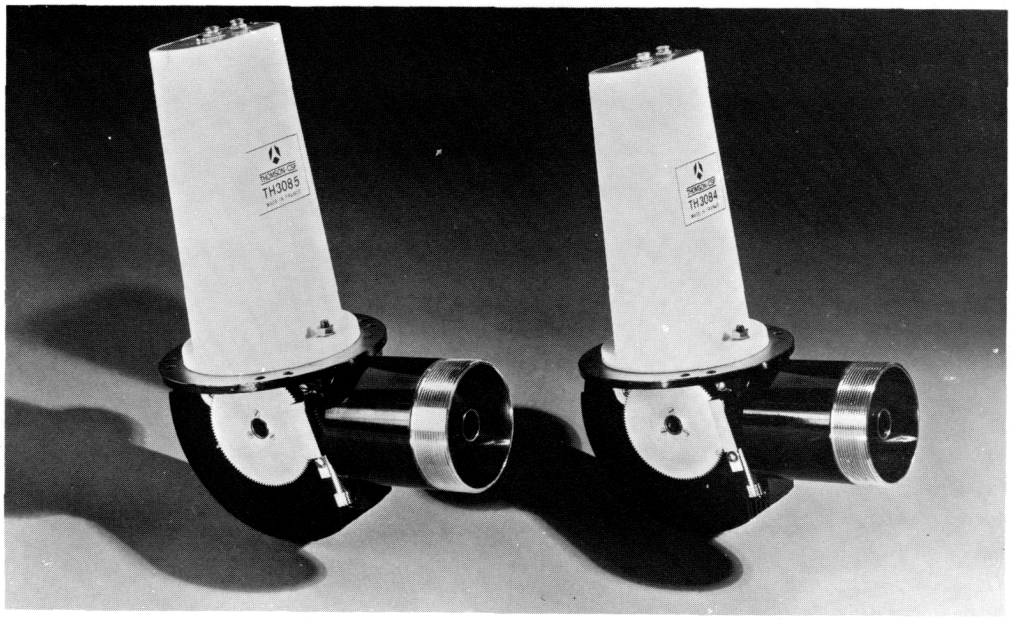

The TH 3084 and TH 3085 magnetrons are pulsed, high-power oscillators, each capable of delivering peak output power of 800 kW. Of the external-magnet type, they are also mechanically tunable from 2700 to 2900 MHz for the TH 3085 and from 2900 to 3100 MHz for the TH 3084.

Both of these tubes are fitted with fins in the anode area for forced-air cooling. The RF output is designed for coupling to a standard coaxial transmission line, using a coaxial adapter.

The TH 3084 and TH 3085 are provided with loaded potting, to reduce the stray radiation emitted through the cathode stem.

GENERAL CHARACTERISTICS

Electrical

Frequency range		
TH 3084	2900 - 3100	MHz
TH 3085	2700 - 2900	MHz
Peak output power, min.	800	kW
Cathode	Indirectly heated oxide-coated type	
Warm-up/Standby heater voltage,	16	V
Warm-up/Standby heater current	2. 8 to 3. 4	A
Heater voltage in operation	See the schedule, page 6	
Pulse duration	1 to 2	µs
Duty cycle	0. 0005	
Frequency pulling, max.	15	MHz
Anode voltage	30	kV
Anode current	70	A
Magnetic field	2700	G

Mechanical

Dimensions	See the Outline Drawing
Operating position	Any
Cooling	Forced air
RF output	1 5/8" coaxial line (53. 4 Ω)with special coupler (See the Outline Drawing)
Net weight, approx.	3. 0 kg
Tube with packing	6. 0 kg
Tuner turns to cover the frequency range, (max.)	
TH 3085	150 turns
TH 3084	120 turns

ABSOLUTE RATINGS (1)

(non-simultaneous)

	Min.	Max.	Units
Warm-up time	2	–	mn
Heater voltage (2)	14. 4	17. 6	V
Heater starting current (peak)	–	15	A
Pulse duration	–	2. 5	µs
Duty factor	–	0. 001	
Average input power :			
TH 3085	–	1200	W
TH 3084	–	1300	W
Peak input power :			
TH 3085	–	2000	kW
TH 3084	–	2200	kW
Peak anode voltage :			
TH 3085	–	32	kV
TH 3084	–	32. 5	kV
Peak anode current	–	70	A
Load VSWR	–	1. 5 : 1	
RF output pressurization	–	3	bars
Anode temperature	–	100	°C
Cathode terminal temperature	–	100	°C

TYPICAL OPERATION

Heater voltage :		
- warm-up and standby	16	V
- in operation	8	V
Magnetic field	2700	gauss
Pulse duration	1	µs
Duty cycle	0. 0005	
Anode voltage, peak :		
TH 3085	29	kV
TH 3084	29. 5	kV
Anode current, peak	70	A
RF power, peak (3) min.	800	kW
Frequency pulling, max.	15	MHz

(1) Limiting values, **NOT operating values.** No one value ever to be exceeded, even under transient conditions, and operation at more that one limiting value at the same time may cause tube damage. Equipment must be designed so that these limits are never exceeded.

(2) See the schedule, page 6.

(3) Into a dissipating load presenting a VSWR lower than 1. 15 : 1.
The waveguide should be pressurized at high power level. Absolute pressure in the output waveguide = 3 bars.

Frequency	f_o	=	2800 MHz
	I_c	=	40 A
	B	=	2700 G
	f_r	=	500 Hz
	τ	=	1 μs

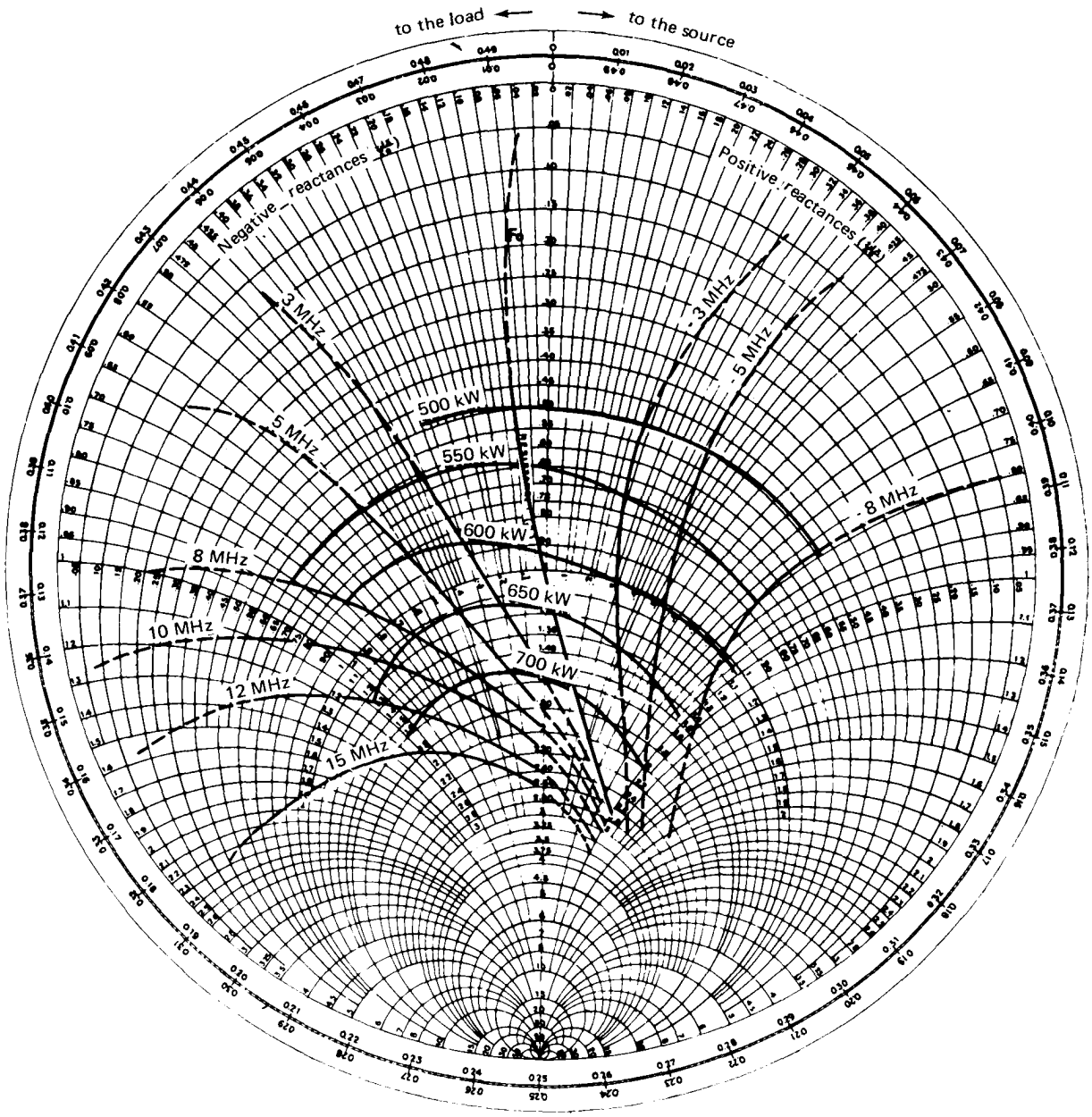

Figure 1 - Rieke diagram for the TH 3085.

Pulse duration : 1 μs
Repetition frequency : 500 Hz
Operating frequency : 2800 MHz
Frequency pulling : 10 MHz

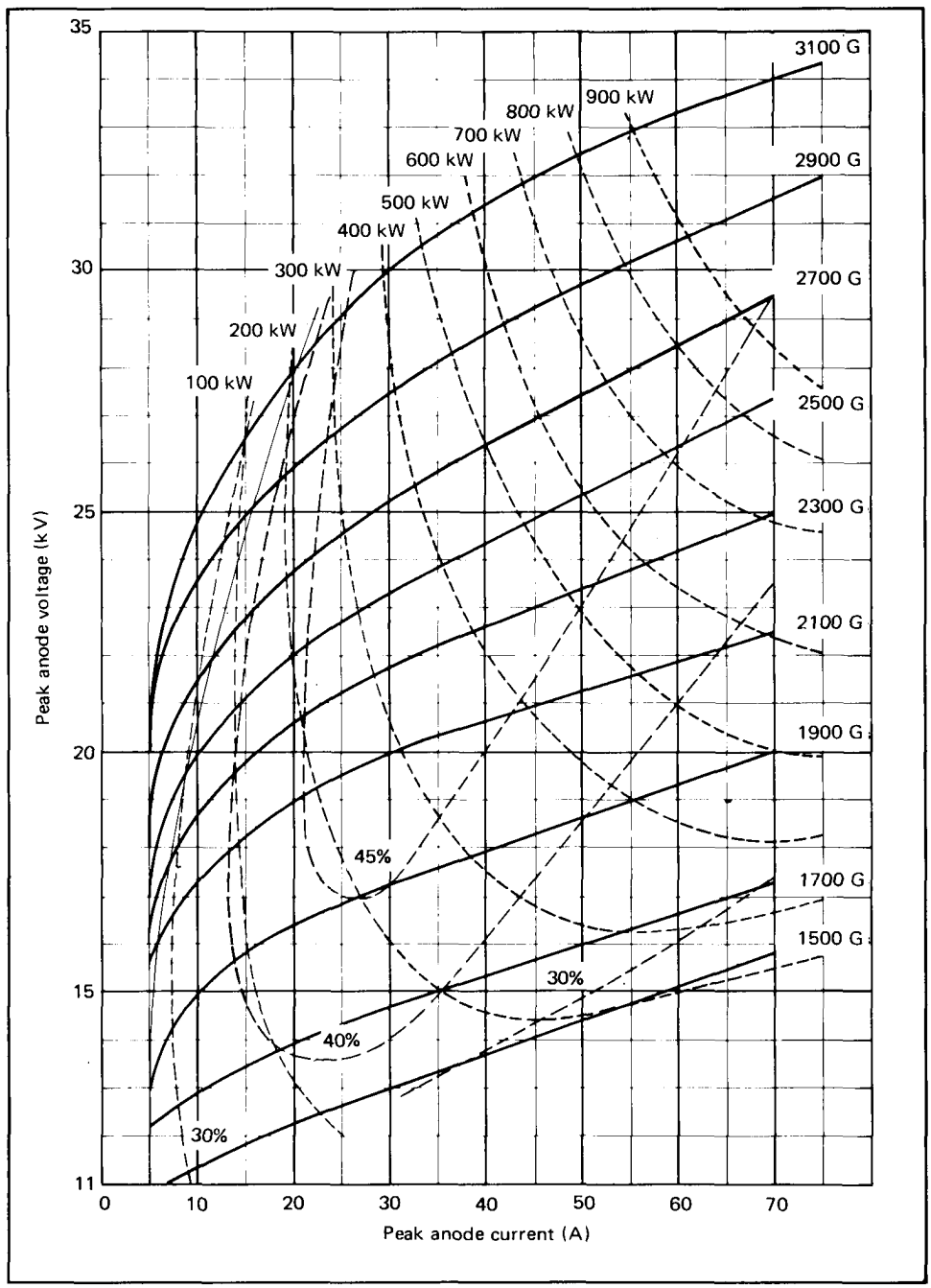

Figure 2 - Typical characteristic curves for the TH 3085.

OPERATING INSTRUCTIONS

These instructions provide basic information concerning the storage, installation and operation of the TH 3084 and TH 3085 magnetrons. More complete information, required, for example, for the design of a new type of equipment, can be furnished upon request.

WARNING

High Voltage

All magnetrons operate with high anode potentials, which can cause lethal shocks to operating personnel. Suitable safety interlocks must be provided to avoid this shock hazard.

RF Leakage

Sufficient RF power may be radiated through the cathode stem and other openings to interfere with adjacent circuit components. This radiation may be hazardous to human beings, especially to the eyes when arcing or the cathode temperature are being observed. Adequate precautions must be taken to guard against these hazards.

I - STORAGE and INSTALLATION

Stored magnetrons are much more likely to remain in a ready-to-operate condition if left in their original packing or placed in correctly designed storage racks. Whenever transported, they should be correctly packed to guard against subjecting the tube to undue vibration, shock or stress.

Care must be taken whenever handling these magnetrons ; they can be permanently damaged if subjected to rough handling. This is especially true when fitting the magnetron into its permanent magnet. Additionally, steel, nickel or any other magnetic materials must be kept from close contact with the magnet ; only non-magnetic tools should be used during installation operations.

The permanent magnet gap should correspond to the specifications ; a 50-mm field correction disk should be installed on the magnet's north-seeking pole.

Verify the tube position with respect to the magnet. The tube must be mounted with its cathode side next to the magnet's north-seeking pole, as follows (see Figure 3) :

1) Take off the No. 350 204 washer after having set the magnetic field at the rated value.
2) Place the washer No. 351 132, delivered with the tube, on the north-seeking pole of the magnet, and fasten it down with a brass countersunk-head screw.
3) The magnetron should be placed with its tuning system directed toward the south-seeking pole.

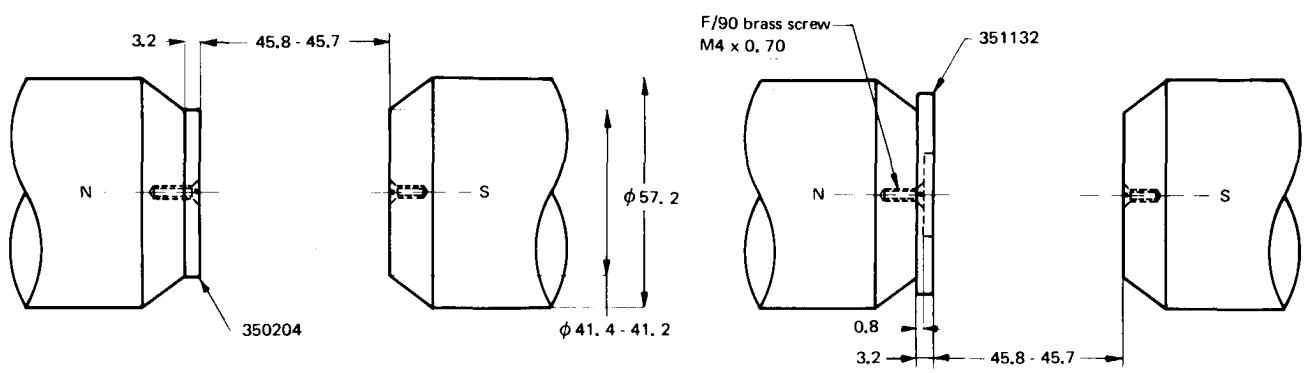

Figure 3

Checking the magnetic field :

a) The No. 350 204 washer being installed, set the magnetic field for 2700 gauss (measured in the middle of the gap).

b) Take off the No. 350 204 washer and put the No. 351 132 washer in its place for magnetron operation.

Connect the current leads to the magnetron base. The cathode is connected to pin "C", identified on the protective cover.

As a protective measure, the anode voltage-supply return must be connected to the cathode terminal to prevent anode current and transients from passing through the heater and possibly causing burn-out. Also, a non-inductive capacitor of at least 4, 000 pF must be connected in parallel with the filament, directly across the heater terminals, to protect the tube in case of arcing or flashover.

II - STARTING and OPERATING

Apply the heater voltage gradually. The heater surge current must not exceed 6 amperes. Allow at least two minutes for the cathode to fully warm up before applying any high voltage to the tube.

Always tune the magnetron to the higher frequency limit when starting (3100 MHz for the TH 3084, 2900 MHz for the TH 3085). Turn the tuning mechanism clockwise until the mechanical stop is reached to set the magnetron to its highest frequency.

Before applying the high voltage, verify that the air cooling system is operating correctly.

Apply the negative pulsed high voltage to the cathode. If arcing or fluctuations of the average anode current are observed, follow the procedure given in Section III. The mounting plate must be used as the grounding contact. In the normal operating modes, the observed pulse forms must correspond to the following characteristics :

Voltage rise time (measured between 20 % and 85 % of the peak voltage) = 0. 1 to 0. 2 μs.

Any ripple on the top of the current pulses must not exceed 10 % of the average value of the peak current. Inverse voltage must not exceed 20 % of the applied pulse.

The heater voltage must be reduced in accordance with the following schedule :

Average Input Power (W)	Heater Voltage (V)
1000 - 1200	8. 0
800 - 1000	10. 5
600 - 800	13
400 - 600	15
less than 400	16

The average input power is given by the following formula

$P_{in} = I_{ap} \times V_{ap} \times D_u$

where P_{in} = average input power in watts

I_{ap} = peak anode current in ampere

V_{ap} = peak anode voltage in volts

and D_u = duty cycle

When tuning these magnetrons, care must be taken not to exceed the frequency limits specified (2700 -2900 MHz - for the TH 3085, 2900 - 3100 MHz for the TH 3084).

Particularly, operating beyond the lower frequency limit may cause oscillation or instability, and thus damage to the tube.

III - STARTING A NEW MAGNETRON

A new magnetron, or one that has been idle or stored for a while, may contain small traces of gas. This gas can cause internal arcing to occur when the high voltage is applied. These arcs are generally evidenced by fluctuations of the average anode current, and are usually short (less than two seconds long) and harmless.

When, however, these arcs or flashes are persistent or severe, causing rapid and uncontrolled fluctuations of the average cathode current, the following procedure must be followed to avoid damaging the tube :

1 - Reduce the current to the level just below that at which arcing begins. Hold the current at this value for several minutes (about five).
When the operation of the tube is stable, gradually increase the anode current.
Repeat this procedure as often as necessary until stable operation at the desired operating current is achieved.

2 - To obtain stable operation of the magnetron, it may be necessary to maintain the anode current 2 or 3 mA higher than the normal value. This results in a very stable operation when the current is reduced to the initial value.

COAXIAL ADAPTER

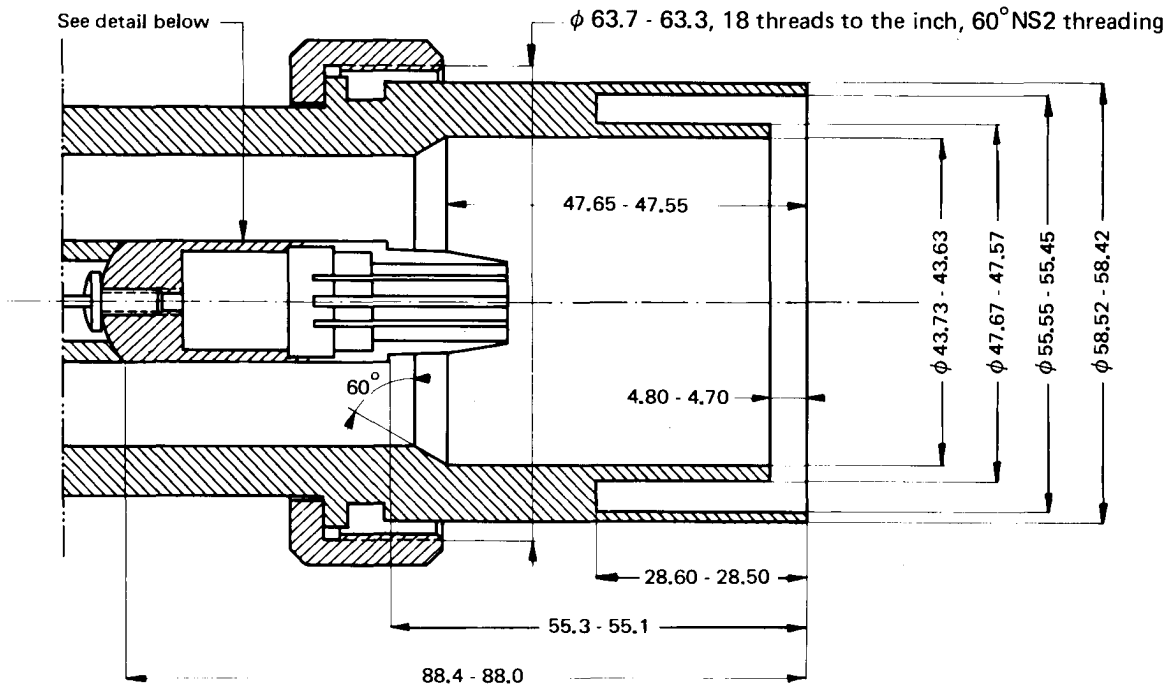

Detail

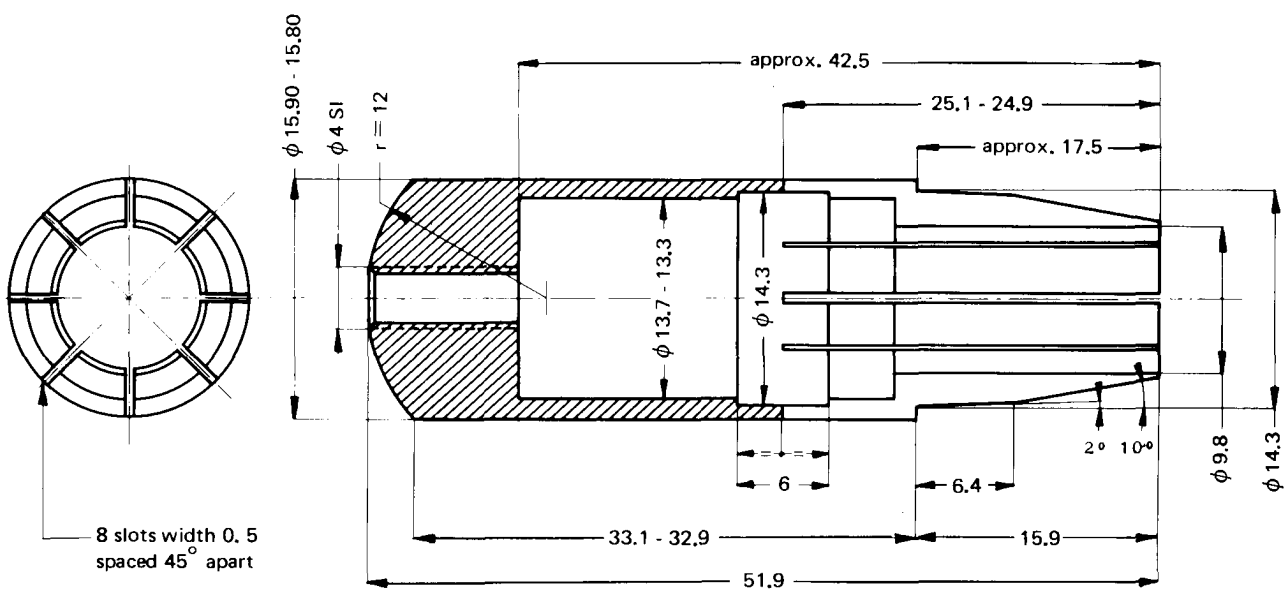

Dimensions in mm.

OUTLINE DRAWING

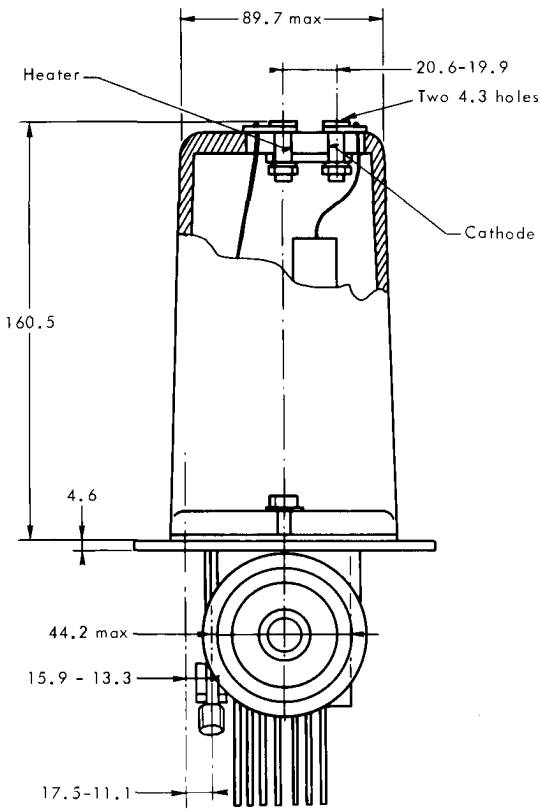

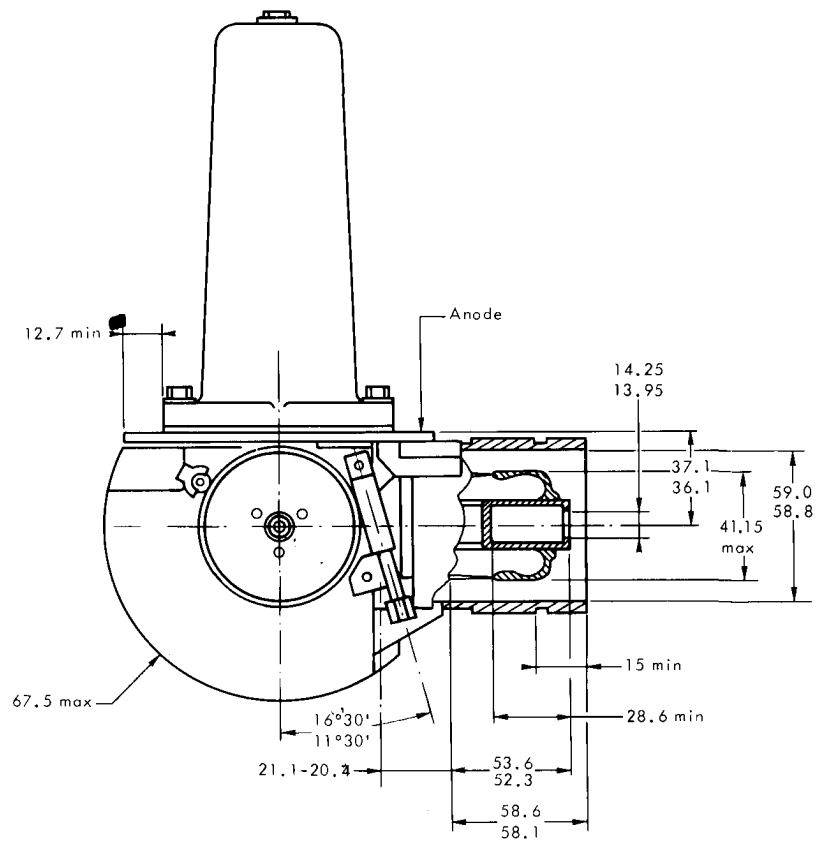

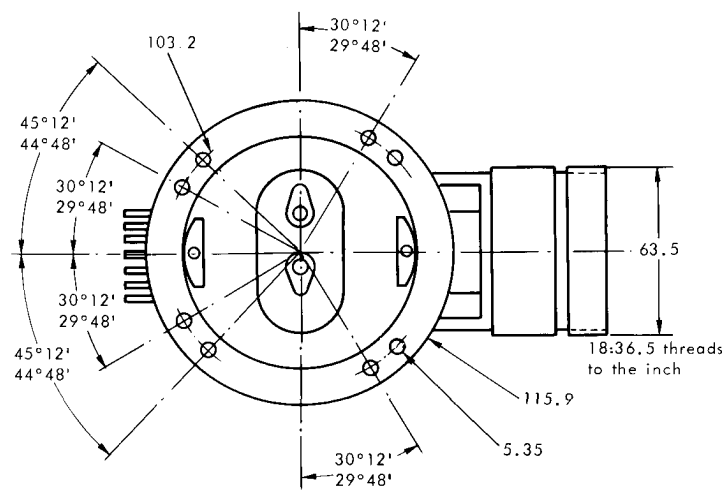

Dimensions in mm, nominal unless otherwise marked.