TH 3080 – TH 3081 MAGNETRONS

The TH 3080 and TH 3081 magnetrons are pulsed, high-power oscillators, each capable of delivering peak output power of one megawatt and an average power of two kilowatts.

Both of these tubes are mechanically tunable, from 2700 to 2800 MHz for the TH 3080 and from 2800 to 2900 MHz for the TH 3081, and both employ integral permanent magnets for electron-beam focusing.

These modern radar magnetrons are especially appropriate for use in MTI systems, where RF energy that is relatively free of time, frequency or amplitude jitter is required, and where low phase noise is also desirable.

Cooling of the TH 3080 and TH 3081 can either be all by forced air, or by a combination of forced air and circulating water, at the user's option.

GENERAL CHARACTERISTICS

Electrical

Frequency range TH 3080	2700 - 2800	MHz
TH 3081	2800 - 2900	MHz
Peak output power, typical	1.0	MW
Heater voltage (1)	8.5	V
Heater current, typical	9.0	A
Peak anode voltage	28 to 35	kV
Average anode current	150	mA

Mechanical

Mounting position	Vertical, cathode down
Tuning	Mechanical
Tuner turns to cover the frequency range, max.	220
Tuner torque, max.	50 oz - in (0.36 N.m)
Tuner rotation rate, max.	300 rpm
Weight, approx.	30 kg
Output :	
- waveguide	RG 48/U
- flange	Special (see outline drawing)
Coupler collar (2)	SARMA type C 6048/44 or equivalent

(1) See the Application Notes.
(2) Not supplied with the tube.

Limiting values for equipment design

Equipment-design values, **NOT** operating values. No one value ever to be exceeded, even under transient conditions, and operation at more than one limiting value at the same time may cause tube damage.

	Min.	Max.	Units
Heater voltage (3)	8. 1	8. 9	V
Heater starting current, peak	–	40	A
Cathode warm-up time	6	–	mn
Anode voltage, peak	28	35	kV
Anode current, peak	–	80	A
Input power, peak	–	2. 3	MW
Input power, mean	–	4. 6	kW
Duty cycle (4)	–	0. 002	
Pulse length (4)	0. 5	5. 0	µs
Rate of rise of voltage pulse	–	100	kV/µs
Anode temperature	–	140	°C
Cathode terminal temperature	–	160	°C
VSWR at the output coupler	–	1. 3 : 1	

Cooling

– MAGNETRON WAVEGUIDE - Forced air

Rate of air flow	5. 0	–	ft^3/mn
	0. 09	–	m^3/mn

– MAGNETRON BODY - Two cooling possibilities :

1) FORCED AIR	Rate of air flow (at 35 °C)	200	–	ft^3/mn
		5. 7	–	m^3/mn
	Pressure drop (on water gauge)	–	2. 5	inches
		–	63. 4	mm
2) WATER	Rate of water flow	1. 5	–	l/mn
	Pressure drop	–	1	bar

(3) No anode voltage may be applied until the cathode has been warmed up. During tube operation, the heater voltage must be adjusted according to the schedule, page 3.

(4) Consult us for other operating conditions of duty cycle or pulse length.

Typical operation

Heater voltage	0	V
Anode current, peak	70	A
Pulse length	4. 0	µs
Pulse repetition rate	500	pps
Anode voltage,peak	33	kV
Output power, peak	1. 0	MW
Output power, average	2. 0	kW
Frequency pushing (at 70 A)	40	kHz/A

APPLICATIONS NOTES

These applications notes provide basic information concerning the storage, installation and operation of the TH 3080 and TH 3081 magnetrons. More complete information, required, for example, for the construction of a new type of equipment, can be furnished upon request.

STORAGE AND INSTALLATION

Stored magnetrons are much more likely to remain in a ready-to-operate condition if left in their original packing or placed in correctly designed storage racks. Whenever transported, they should be correctly packed to guard against subjecting the tube to undue vibration, shock or stress.

These magnetrons must be protected from mechanical strain by the use of a section of flexible waveguide between the magnetron and the waveguide system.

APPLYING VOLTAGES

1. Apply the heater voltage gradually. The heater surge current must not exceed 40 amperes. Allow at least six minutes for the cathode to fully warm up before applying any high voltage to the tube.
2. Verify that the cooling system is operating correctly.
3. Apply the high voltage. On the application of anode voltage the heater voltage must be reduced as follows :

Mean input power (kW)	Heater voltage (Vrms)
0 to 1	8.5
1 to 2	6.5
2 to 3	5.0
3 to 4	3.0
over 4	zero

The magnetron heater must be protected against arcing by the use of a minimum capacitance of 1.0 μF, shunted across the heater directly at the input terminals.

STARTING A NEW MAGNETRON

A new magnetron, or one that has been idle or stored for a while, may contain small traces of gas. This gas can cause internal arcing to occur when the high voltage is applied. These arcs are generally evidenced by fluctuations of the average anode current, and are usually short (less than two seconds long) and harmless.

When, however, these arcs or flashes are persistent or severe, causing rapid and uncontrolled fluctuations of the average cathode current, the following procedure must be followed to avoid damaging the tube :

1. Reduce the current to the level just below that at which arcing begins. Hold the current at this value for several minutes (about five).
2. When the operation of the tube is stable, gradually increase the anode current.
3. Repeat this procedure as often as necessary until stable operation at the desired operating current is achieved.

WARNING

All magnetrons operate with high anode potentials, which can cause lethal shocks to operating personnel. Suitable safety interlocks must be provided to avoid this shock hazard.

RF LEAKAGE

Sufficient RF power may be radiated through the cathode stem and other openings to interfere with adjacent circuit components. This radiation may be hazardous to human beings, especially to the eyes when arcing or the cathode temperature are being observed. Adequate precautions must be taken to guard against these hazards.

X-RAYS

High power magnetrons emit a significant level of X-rays in the areas of the cathode and the RF output. Appropriate shielding should be installed to protect the operating personnel.

OUTLINE DRAWING

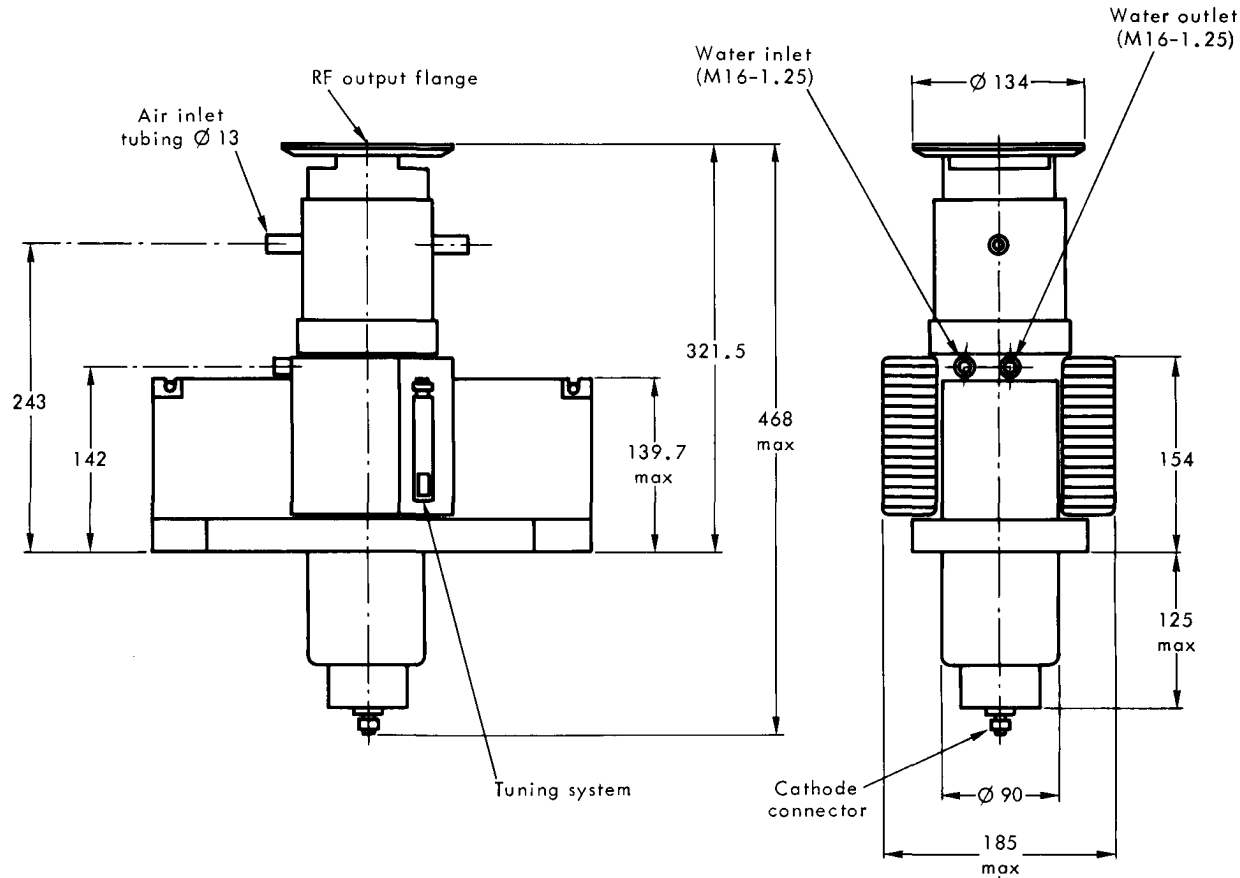

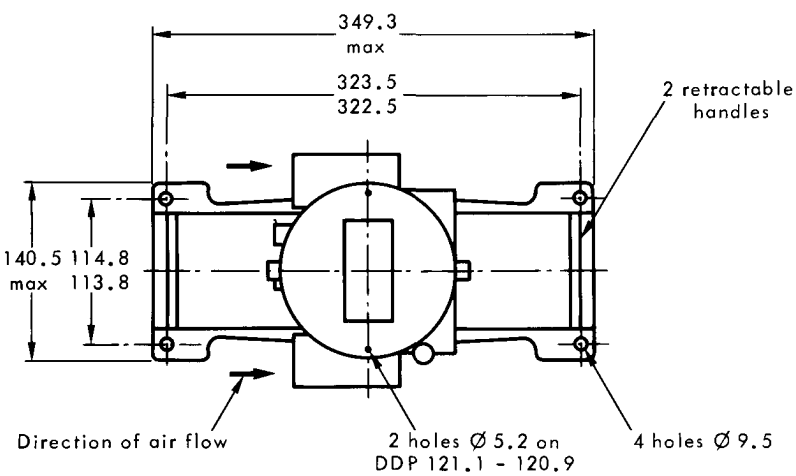

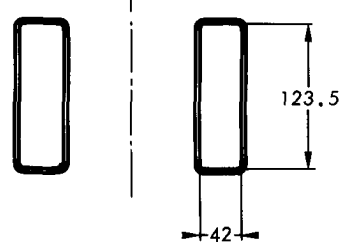

DIMENSIONS OF BODY-COOLING AIR INLET

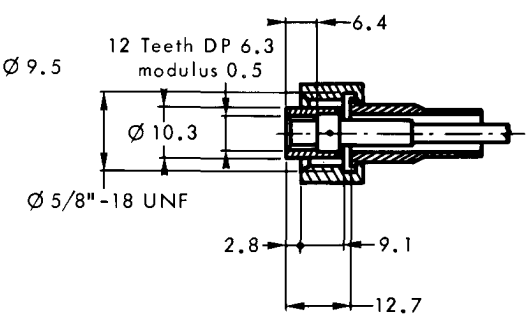

DIMENSIONS OF FREQUENCY-TUNER COUPLING

Dimensions in mm.