TH 3061 MAGNETRON

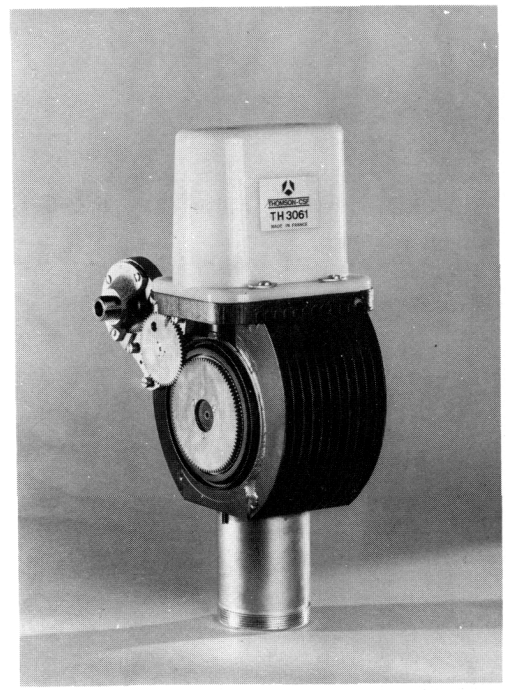

The TH 3061 is a tunable, L-band, high-power oscillator with external magnet.

This tube delivers a minimum peak output power of 500 kW at any operating frequency in the band 1220 to 1350 MHz.

An improved version of the well known and highly regarded 5J26 magnetron, the TH 3061 has been specially designed for long-life operation in MTI systems, while retaining the proven reliability and ease of operation of its predecessor.

GENERAL CHARACTERISTICS

Electrical

Frequency range	1220 to 1350	MHz
Peak output power, min. (average anode current 68 mA)	500	kW
Warm-up/standby heater voltage, nom.	23. 5	V
Warm-up/standby heater current	2. 0 to 2. 4	A
Heater voltage in operation (average anode current 68 mA)	0	V
Pulse duration, (1)	0. 7	µs
Duty cycle, (1)	0. 0012	
Anode voltage	33	kV
Magnetic field, (1)	1400	G

Mechanical

Operating position	Any
Cooling	Forced air
Anode temperature, max.	150 °C
RF output	1 5/8" coaxial line with special coupler (see drawing)
Net weight	18 lbs 8 kg

(1) For use with other pulse lengths, duty cycles or field strengths, consult THOMSON-CSF.

ABSOLUTE RATINGS (2)

	Min.	Max.	Units
Heater surge current	–	6	A
Heater voltage	23	24	V
Pulse duration	0. 5	1. 5	µs
Duty cycle	–	0. 00125	
Average input power	–	2450	W
Peak input power	–	2000	kW
Peak anode voltage	–	35	kV
Peak anode current	–	60	A
Rate of rise of voltage pulse (above 50 % amplitude)	–	120	kV/µs
Warm-up time	3	–	mn

(2) No single rating should be exceeded.

TYPICAL OPERATION

	Case 1	Case 2	Units
Pulse duration	0. 7	1. 5	µs
Operating frequency	1300	1300	MHz
Peak anode current	56	46	A
Average anode current	67	46	mA
Peak anode voltage	33	30	kV
Duty cycle	0. 00125	0. 001	
Rate of rise of voltage	100	100	kV/µs
Peak output power	580	500	kW
Average output power	690	500	W
Side-lobe level	11	11	dB
RF bandwidth	2. 0	0. 85	MHz
Pulling figure (VSWR 1. 5 : 1)	2. 5	2. 5	MHz

OPERATING INSTRUCTIONS

These instructions provide basic information for installing and operating the TH 3061 magnetron.

Installation

During mounting and handling the magnetron, care must be taken to prevent shocks or strains on the glass-to-metal seal of the output.

Use only non-magnetic tools during installation. The north pole of the magnet should be adjacent to the cathode and the tube should be located between the pole tips such that these are concentric with the axis of the tube.

A small deviation from this position may result in lower output power (see drawing, page 5).

Electrical Connections

The common cathode/heater terminal is located at the side of the magnetron which is provided with the tuning mechanism. It is, moreover, indicated by the inscription C on the insulator which protect the heater leads.

It is necessary to bypass the magnetron heater, directly across the heater terminals, with a capacitor having a minimum non-inductive capacitance of 4000 pF, rated for 1000 V.

In order to prevent heater burn-out the negative high-voltage pulse must be applied to the common cathode/heater terminal.

Application of Voltages

An adequate air flow should be directed along the cooling fins on the magnetron in order to keep the anode temperature below 150 °C.

Apply heater voltage gradually. The heater surge current should not exceed 6 A. Allow at least 3 minutes for the cathode to warm up before applying the high voltage.

Tune the magnetron to the higher frequency limit (1350 MHz). Clockwise rotation of the driving gear wheel of the tuning mechanism results in higher magnetron frequency.

After 3 minutes at full heater voltage, increase the anode voltage. The heater voltage must be reduced in accordance with the heater-voltage adjustment curve (see page 4).

The TH 3061 magnetron has been designed for operation under the following pulse conditions :

- pulse duration : 0. 5 μs to 1. 5 μs ± 10 %
- RRV : 100 kV/μs nominal

The spike on the top portion of the pulse must be kept as small as possible to avoid excessive peak pulse current.

The ripple over the top portion of the current pulse should not exceed ± 7 % of the average peak value of current. Inverse voltage should not exceed 35 % of the forward voltage. Post voltages should be held to a minimum as they may cause post-pulse noise or oscillation and increased leakage current.

Tuning

The tuning-gear assembly provides the variable frequency control of the magnetron.

The tuning assembly includes mechanical stops at each of the specified frequency extremes. Adjustment of the tuning mechanism beyond the stated frequency limits must not be attempted.

STARTING A NEW MAGNETRON

When a new magnetron, or a magnetron that has been idle or stored for a period of time, is put into operation, some sparking and instability may occur.

If instability occurs at any step, as evidenced by arcing or erratic average anode current, the following procedure is recommended :

- Adjust the tuning mechanism until the approximate highest frequency position is reached. (Clockwise rotation of the driving gear wheel of the tuning mechanism results in higher magnetron frequency).

- After a three minutes of warm-up with 23.5 V applied to the heater, raise the anode voltage gradually until one half of normal operating power is reached. The heater voltage must be reduced in accordance with the diagram, page 4.

- As soon as the average anode current indicates stable operation, gradually increase the anode voltage until the normal operating conditions are reached. If arcing occurs, stop until the magnetron operates stably again. Care should be taken that the maximum ratings are not exceeded.

- When stable operation at this frequency is reached, tune the magnetron to the lower frequency limit. Operate the magnetron at that frequency until it operates stably.

- After completing this procedure, the magnetron can be set for the normal operating conditions desired.

WARNING

All magnetrons operate with high anode potentials, which can cause lethal shocks to operating personnel. Suitable safety interlocks must be provided to avoid this shock hazard.

RF Leakage

Sufficient RF power may be radiated through the cathode stem and other openings to interfere with adjacent circuit components. This radiation may be hazardous to human beings, especially to the eyes when arcing or the cathode temperature are being observed. Adequate precautions must be taken to guard against these hazards.

X-Rays

High power magnetrons emit a significant level of X-rays in the areas of the cathode and the RF output. Appropriate shielding should be installed to protect the operating personnel.

HEATER VOLTAGE ADJUSTMENT

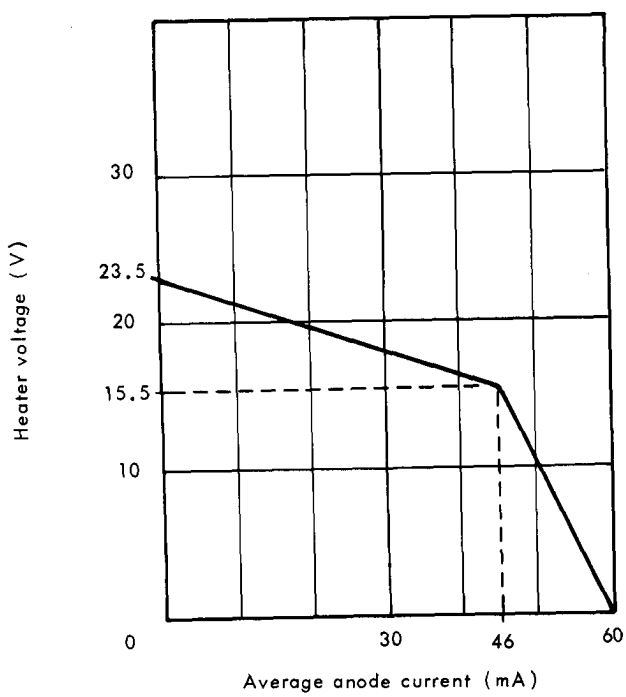

POSITION OF THE TUBE IN THE MAGNET

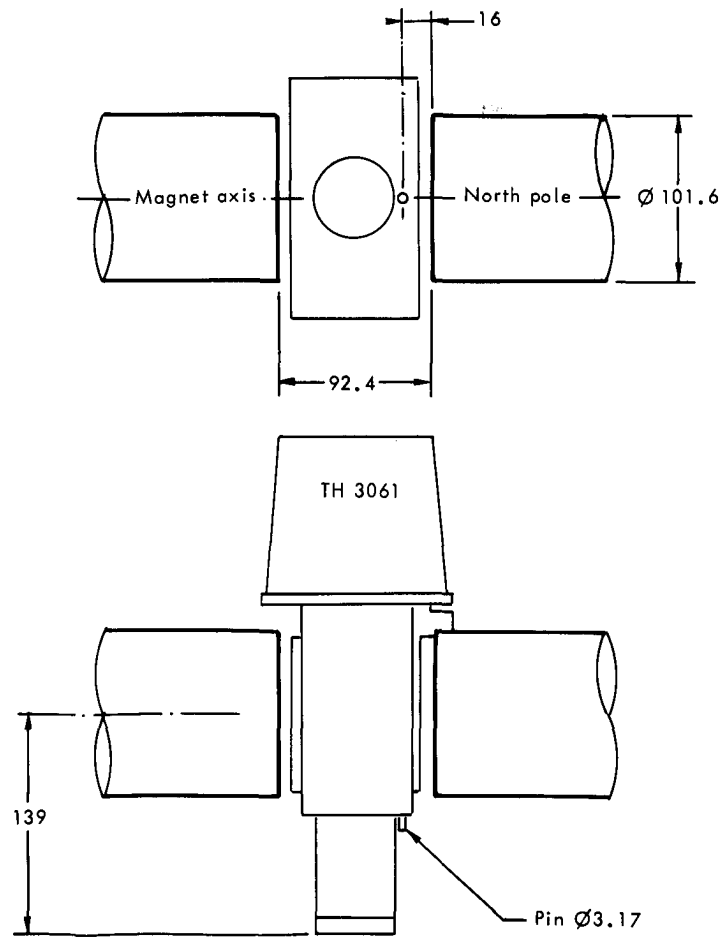

SPECIAL COUPLER

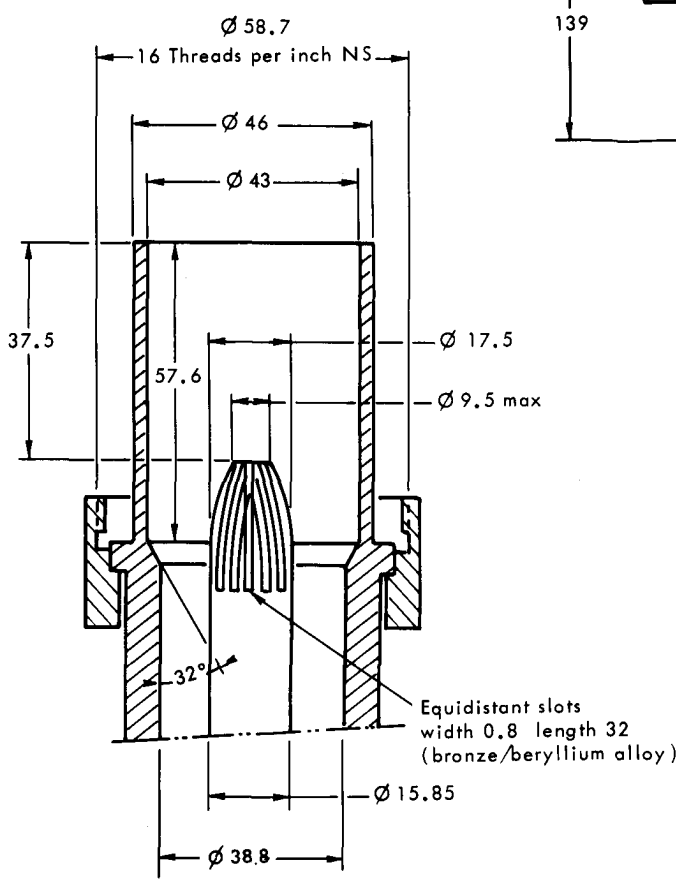

THOMSON-CSF
GROUPEMENT TUBES ELECTRONIQUES

OUTLINE DRAWING

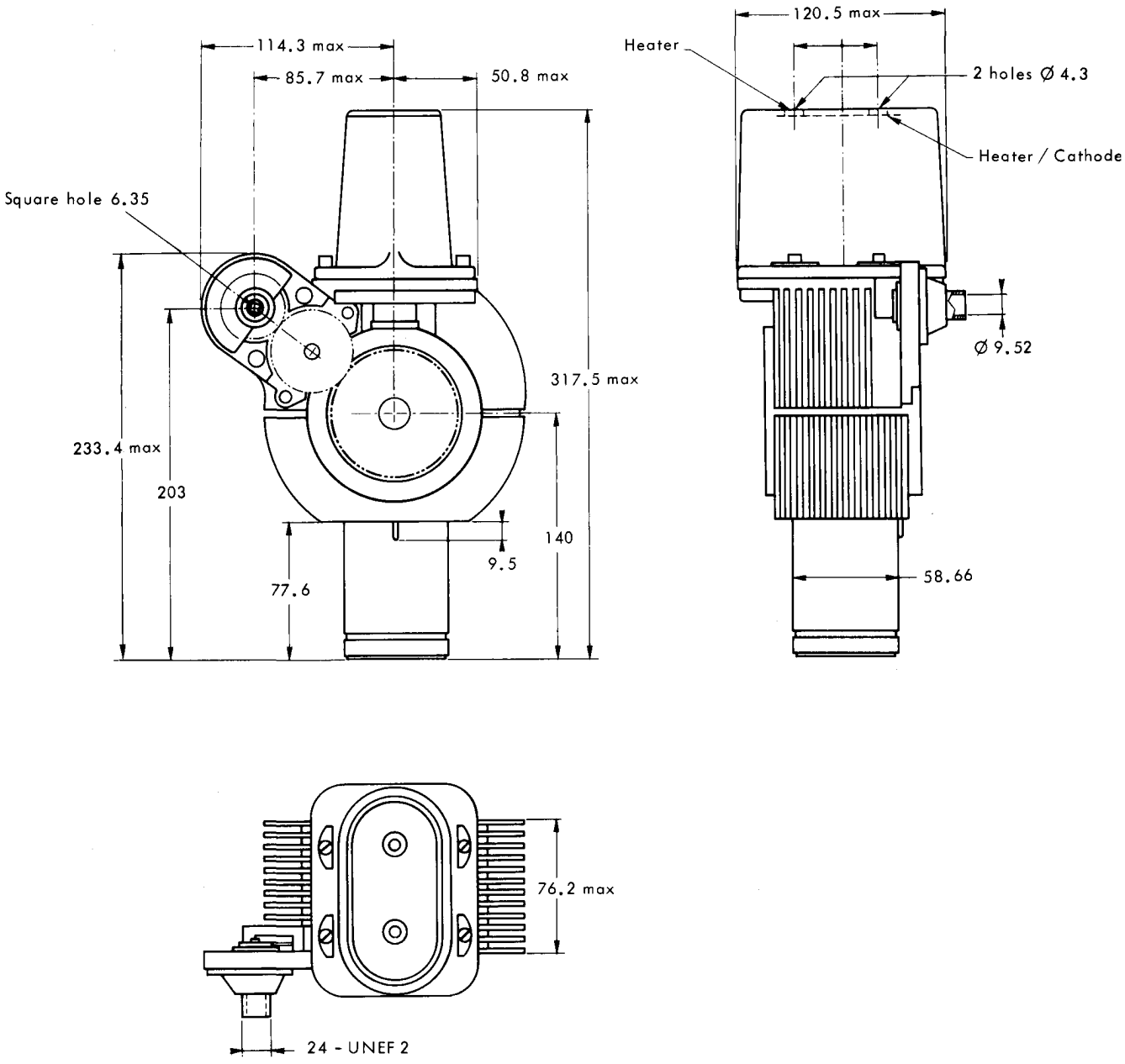

Dimensions in mm, nominal except for those market "max."