TH 297 TETRODE

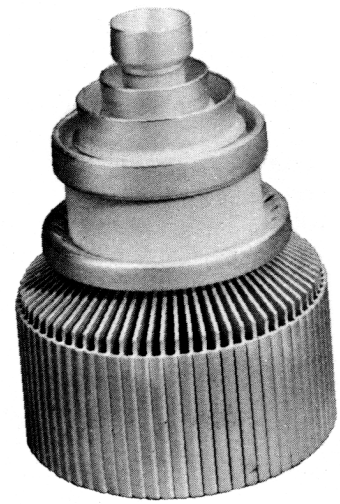

The TH 297 is a forced air cooled ceramic metal tetrode, of coaxial structure. It can be used as a C.W. oscillator or a grounded grid R.F. power amplifier at frequencies up to 1200 MHz. Its anode is capable to dissipate 1.5 kW.

TH 297 tetrode is specially well adapted as R.F. power amplifier in broadband television transmitter and in S.S.B. or F.M. services. Due to its linear characteristics TH 297 is also designed for linear amplifier television translator handling both sound and vision signals in a single channel with a crossmodulation level better than 52 dB.

GENERAL CHARACTERISTICS

Electrical

Type of cathode	thoriated tungsten	
Heating	direct	
Heater voltage (1) (2)	3.20 ± 0.06	V
Heater current, approx.	45	A
Peak cathode current	5	A
Interelectrode capacitance		
- input (g2 tied to g1)	28	pF
- output (g2 tied to g1)	6.5	pF
- cathode-anode	0.03	pF
Amplification factor g1-g2 avg.	6	
Transconductance	20 000	μmhos

Mechanical

Mounting position	vertical	
Anode cooling	forced air	
Minimum airflow (3)	1.5	m^3/mn
Corresponding pressure drop	5	millibar
Maximum inlet air temperature	45	°C
Maximum outlet air temperature	100	°C
Maximum temperature (4)	250	°C
Dimensions	see drawing	

(1) - For heater voltage application, see note page 4.

(2) - In high frequency operation, the cathode is subjected to considerable backbombardment, which raises its temperature. After the circuit has been adjusted for proper tube operation, the heater voltage must be reduced to prevent over-heating of the cathode with resulting short life.

(3) - 30°C incoming air temperature 1.5 kW anode dissipation.

(4) - At any point of ceramic insulators.
It is necessary to provide air cooling for tube terminals and insulators. This air flow must be established before application of any electrode voltage and maintained during 3 minutes at least after heater voltage has been removed.

THOMSON-CSF
GROUPEMENT TUBES ELECTRONIQUES

CLASS B TELEVISION - R.F. POWER AMPLIFIER

Positive grid modulation and negative synchronization

Maximum ratings

All potentials referred to cathode potential

D.C. anode voltage	4.5	kV	Anode dissipation	1.5	kW
D.C. grid g2 voltage	400	V	Grid g2 dissipation	20	W
D.C. grid g1 voltage	-250	V	Grid g1 dissipation	10	W
Peak cathode current	5	A	Frequency	1200	MHz
D.C. anode current	1.2	A			

Typical operation

All data given at permanent white level and without synchronization

Frequency	860	MHz	D.C. anode current	0.9	A
Bandwidth	10	MHz	D.C. grid g2 current	5	mA
D.C. anode voltage	2.8	kV	D.C. grid g1 current	50	mA
D.C. grid g2 voltage	400	V	Driving power	100	W
D.C. grid g1 voltage	-100	V	Anode dissipation	1.2	kW
R.F. peak driving voltage	150	V	Load output power (1)	1	kW

(1) - With a 85% circuit efficiency.

CLASS B TELEVISION - R.F. POWER AMPLIFIER

Negative grid modulation and positive synchronization

Maximum ratings

All potentials referred to cathode potential

D.C. anode voltage	4.5	kV	Anode dissipation	1.5	kW
D.C. grid g2 voltage	400	V	Grid g2 dissipation	20	W
D.C. grid g1 voltage	-250	V	Grid g1 dissipation	10	W
Peak cathode current	5	A	Frequency	1200	MHz
D.C. anode current	1.2	A			

Typical operation

Frequency	860	MHz	D.C. grid g2 current		
Bandwidth	7	MHz	- Synchronizing level	10	mA
D.C. anode voltage	3.5	kV	- Pedestal level	2	mA
D.C. grid g2 voltage	400	V	D.C. grid g1 current		
D.C. grid g1 voltage	-90	V	- Synchronizing level	70	mA
R.F. peak driving voltage			- Pedestal level	10	mA
- Synchronizing level	150	V	Driving power, approx.		
- Pedestal level	110	V	- Synchronizing level	130	W
D.C. anode current			- Pedestal level	80	W
- Synchronizing level	0.9	A	Load output power, approx. (1)		
- Pedestal level	0.7	A	- Synchronizing level	1.5	kW
			- Pedestal level	0.9	kW

(1) - Including power transferred from driver stage, with a 85% circuit efficiency.

CLASS B NARROW BAND F.M. SERVICE-R.F. POWER AMPLIFIER

Grounded grid conditions

Maximum ratings

All potentials referred to cathode potential

D.C. anode voltage	4.5	kV	Anode dissipation	1.5	kW
D.C. grid g2 voltage	400	V	Grid g2 dissipation	20	W
D.C. grid g1 voltage	-250	V	Grid g1 dissipation	10	W
Peak cathode current	5	A	Frequency	1200	MHz
D.C. anode current	1.2	A			

Typical operation

D.C. anode voltage	3	kV	D.C. anode current	0.8	A
D.C. grid g2 voltage	300	V	Driving power	90	W
D.C. grid g1 voltage	-100	V	Anode dissipation	1.2	kW
Peak R.F. driving voltage	130	V	Load output power (1)	1.2	kW

(1) - With a 85% circuit efficiency

LINEAR AMPLIFIER

SINGLE SIDE BAND SUPPRESSED - CARRIER SERVICE

TWO TONE MODULATION

Maximum ratings

All potentials referred to cathode potential

D.C. anode voltage	6	kV			
D.C. grid g2 voltage	800	V	Anode dissipation	1.5	kW
D.C. grid g1 voltage	-250	V	Grid g2 dissipation	20	W
Average anode current at peak of envelope	1.2	A	Frequency	1200	MHz

Typical operation

Class AB_1 - Two tone modulation

D.C. anode voltage	5.7	kV	Average grid g2 current at peak of envelope	15	mA
D.C. grid g2 voltage	700	V	Average grid g2 current	10	mA
D.C. grid g1 voltage	-135	V	Load impedance	3800	Ω
Zero signal anode current	0.3	A	Circuit efficiency	90	%
Average anode current at peak of envelope	0.8	A	Average load power	1.1	kW
Average anode current	0.55	A	Load peak envelope power	2.2	kW

THOMSON-CSF
GROUPEMENT TUBES ELECTRONIQUES

CLASS A - LINEAR AMPLIFIER FOR T.V. TRANSLATOR

HANDLING BOTH SOUND AND VISION SIGNALS
IN A SINGLE CHANNEL-C.C.I.R. SPECIFICATIONS

Maximum ratings

All potentials referred to cathode potential

D.C. anode voltage	4.5	kV	D.C. anode current	1	A
D.C. grid g2 voltage	650	V	Anode dissipation	1.5	kW
D.C. grid g1 voltage	-250	V	Grid g2 dissipation	20	W
Peak cathode current	3	A	Frequency	1200	MHz

Typical operation

Frequency	780	MHz	D.C. anode current	0.35	A
Heater voltage	3	V	Gain	13	dB
D.C. anode voltage	3.5	kV	Video power	250	W
D.C. grid g2 voltage	600	V	Crossmodulation level (3 tones test)	$\leqslant$ 52	dB *
D.C. grid g1 voltage	-90	V			

* - under video level

TUBE PROTECTION AND FEEDING INSTRUCTIONS

In order to achieve long tube life, maximum operating efficiency and circuit stability consistent with the full tube capability, the following instructions should be strictly observed.

I - ELECTRODES FEEDING ORDER - Apply successively :

1. - $\frac{1}{2}$ Vf (filament voltage) during 60 seconds
2. - Nominal Vf during 60 seconds
3. - Grid bias
4. - Anode voltage
5. - Screen voltage
6. - Driving voltage

II - SECURITY DEVICES AGAINST ANODE, SCREEN, GRID OVERCURRENTS -

1. - Overcurrents due to unproper utilisation conditions : the protection can be achieved by 3 relays in series, respectively in grid, screen and anode circuits. These relays are adjusted so as to operate when a current equal to 1.5 Imax. is attained, Imax. being the normal current used in the considered operating conditions. When one of these relays operate, the driving voltage and the screen and anode voltages are simultaneously cut-off.

2. - Overcurrent due to stray oscillations or electrode arcings : the protection can be made by the use of 3 rapid cut-off security devices (grid, screen, anode), acting for a current equal to 5 Imax., Imax being the normal current used in the considered operating conditions. Each of these 3 systems acting on the 2 others should short-circuit driving, screen and anode voltages and eventually grid bias voltage with a total delay lower than 30 microseconds.

III - MONITORING DEVICE FOR OVERTEMPERATURE OF OUTLET COOLING AIR :

The temperature of outlet air coming from the anode cavity must not exceed 100°C. The temperature rises when the cavity is not properly adjusted and it is necessary to provide a monitoring device so as to prevent the user from unproper adjustment. On the other hand, this device allows the user to be sure that the air evacuation system (generally made by the user) is well adapted to the equipment.

CONSTANT CURRENT CHARACTERISTICS
Vg2 = 400 V

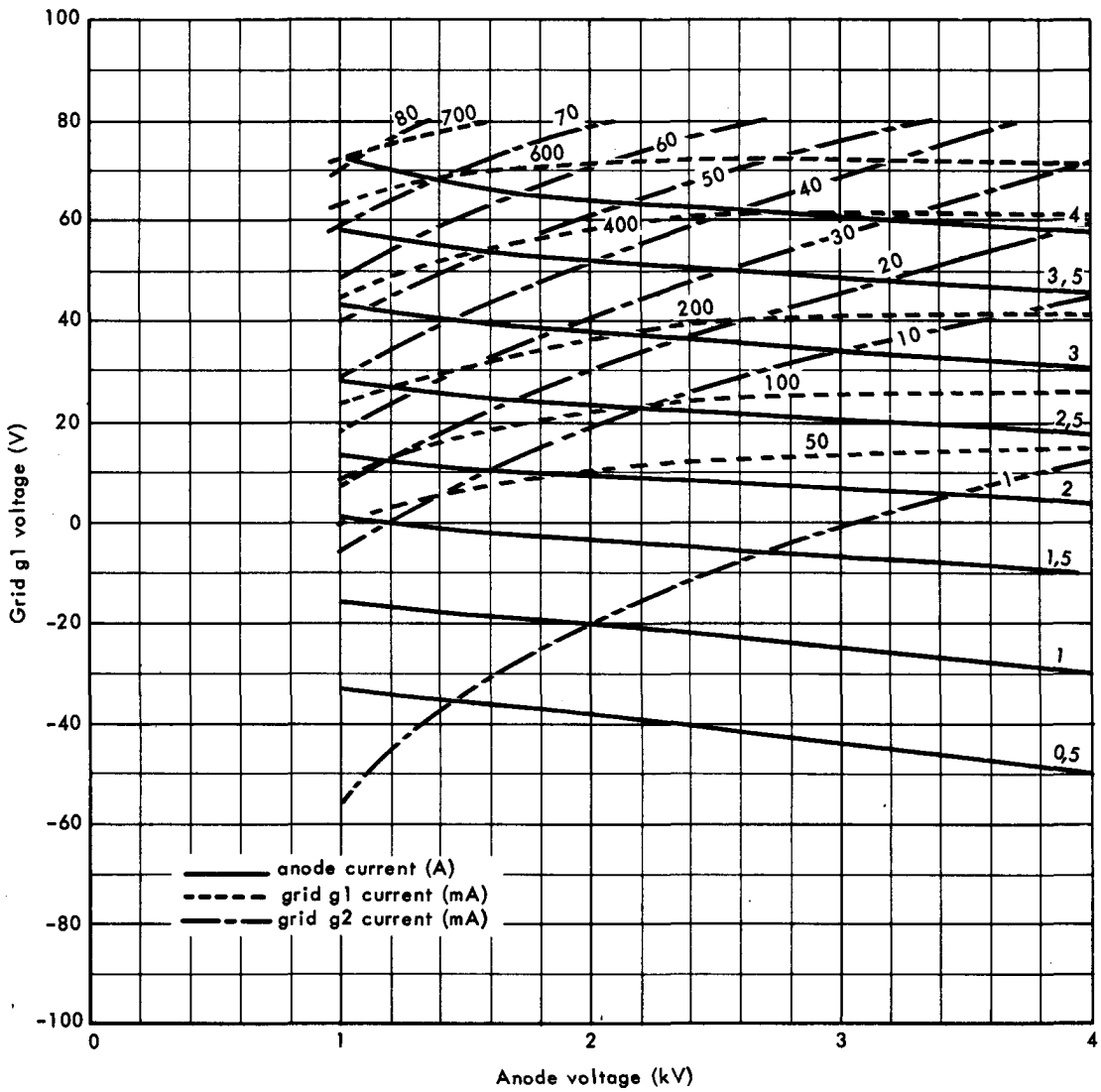

THOMSON-CSF
GROUPEMENT TUBES ELECTRONIQUES

CONSTANT CURRENT CHARACTERISTICS
Vg2 = 800 V

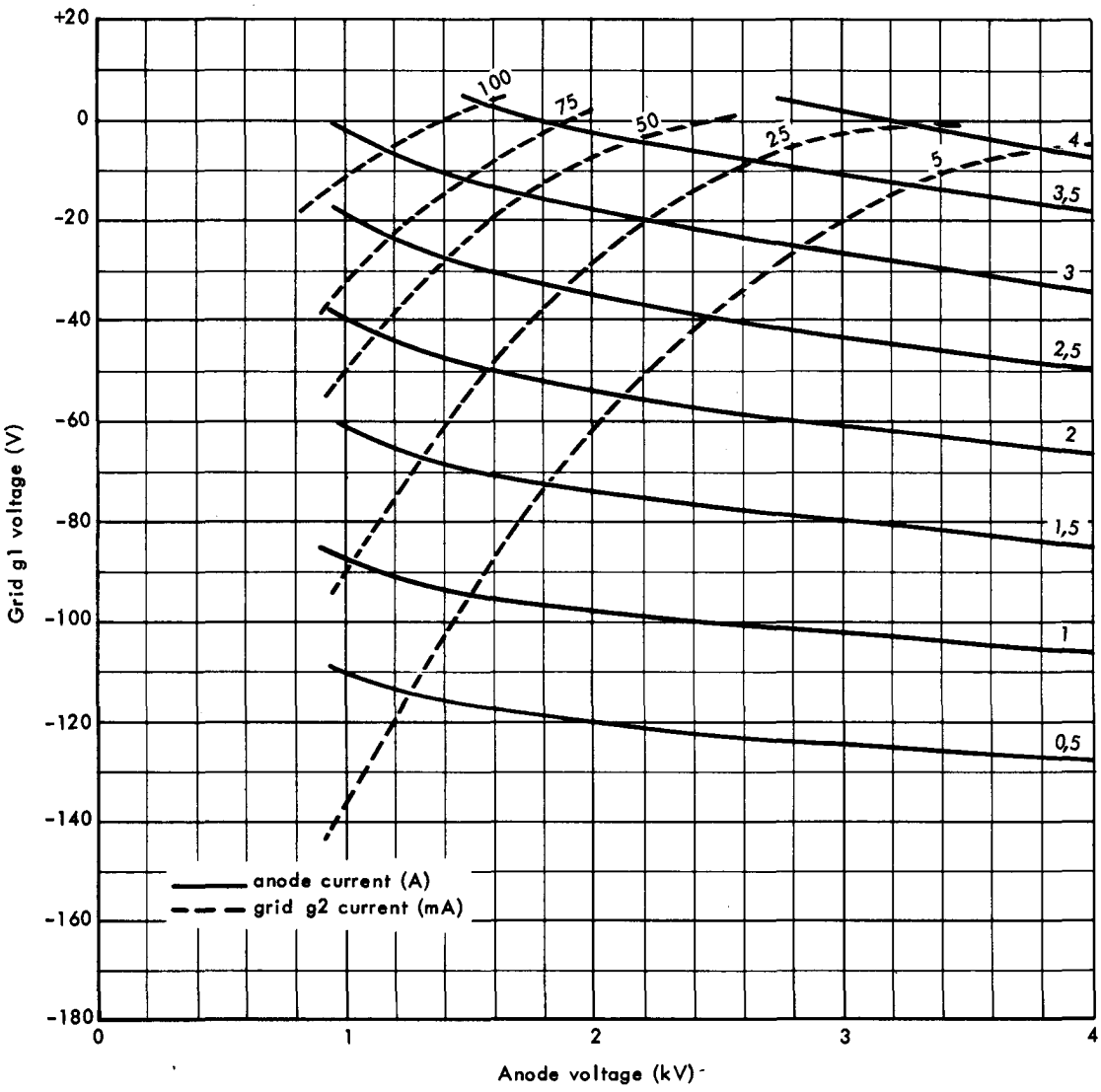

GAUGE

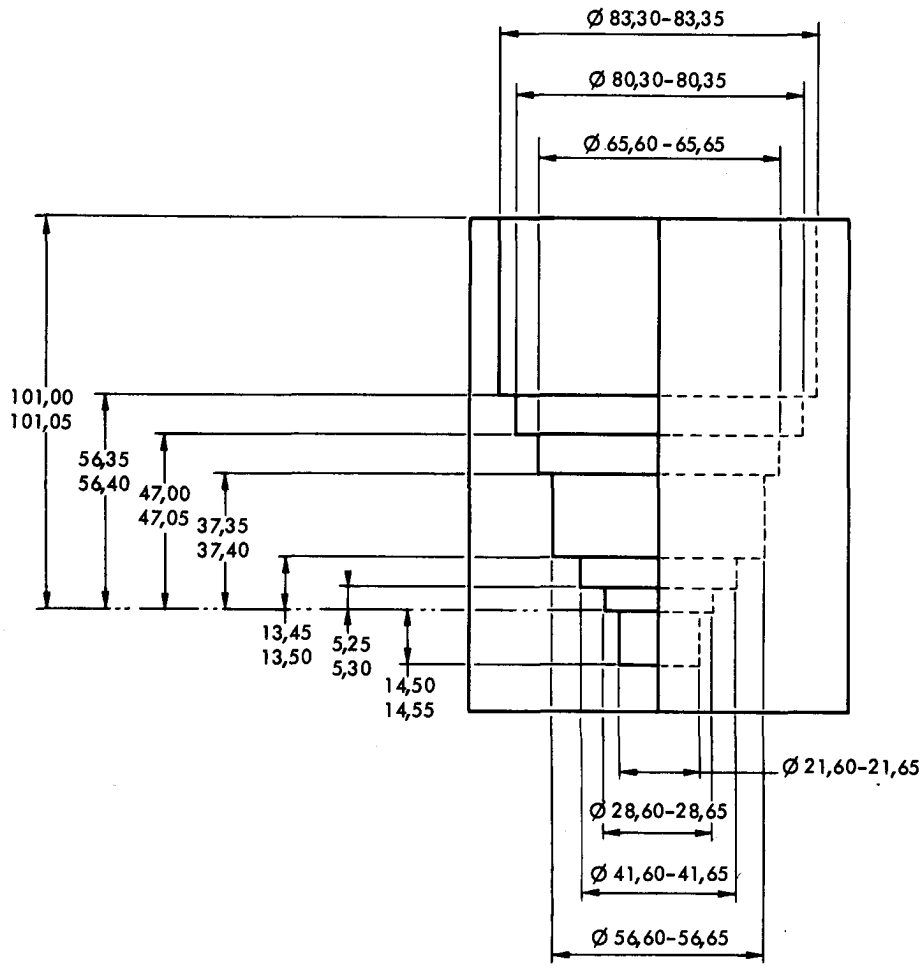

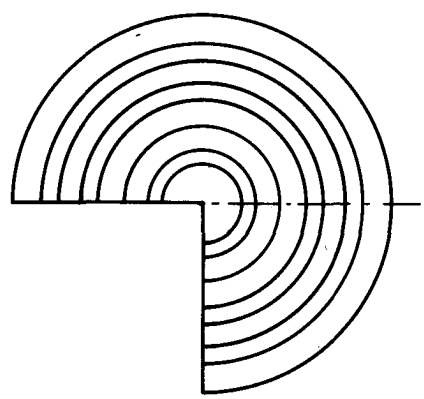

Dimensions in mm.

THOMSON-CSF
GROUPEMENT TUBES ELECTRONIQUES

OUTLINE DRAWING

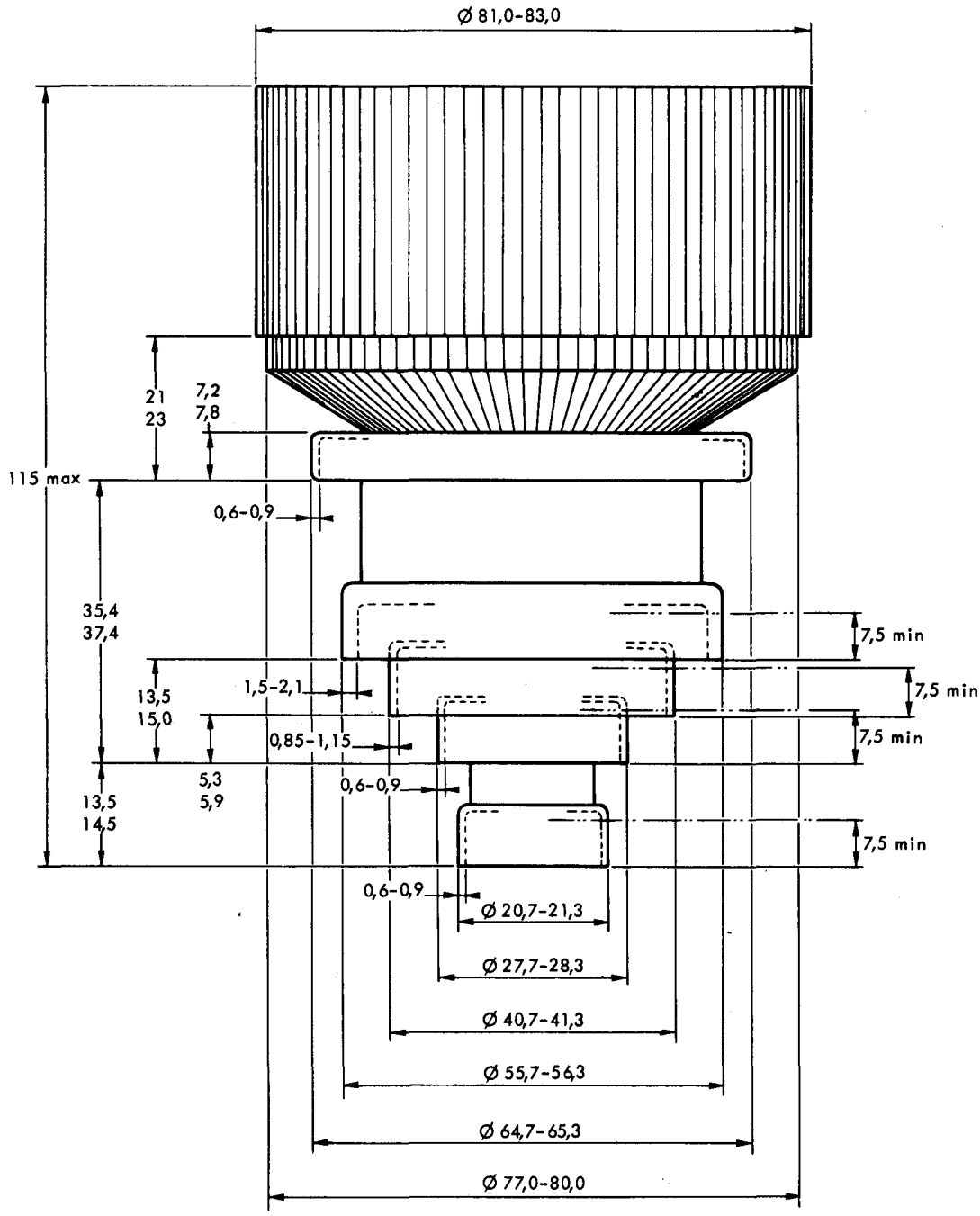

Dimensions in mm.