DISC SEAL TRIODE

TD2-400A

Application: *R.F. oscillator, amplifier or frequency multiplier.*
Power output: *600W at f=470Mc/s.*
Frequency: *470Mc/s at full ratings, 900Mc/s at reduced ratings.*
Construction: *Disc seal, ceramic envelope, forced-air cooled.*

This data should be used in conjunction with GENERAL OPERATIONAL RECOMMENDATIONS—TRANSMITTING VALVES included in this volume of the handbook.

FILAMENT

Thoriated tungsten

V_f (f <600Mc/s)	3.4	V
I_f	19	A

The TD2–400A operates at frequencies where transit time effects cause back bombardment heating of the cathode. At frequencies higher than 600Mc/s the filament voltage must be reduced immediately after operation commences, in accordance with the following table:—

f (Mc/s)	V_f (V)
<600	3.4
600 to 750	3.3
750 to 900	3.2

MOUNTING POSITION

Vertical, anode up or down

CAPACITANCES

C_{a-g}	6.5	pF
C_{g-f}	11.5	pF
C_{a-f}	120	mpF

CHARACTERISTICS

V_a	2.0	kV
I_a	200	mA
V_g	–40	V
g_m	10	mA/V
μ	33	

COOLING

Forced air

$T_{anode\ seal}$ max.	250	°C
$T_{grid\ seal}$ max.	250	°C
$T_{filament\ seal}$ max.	200	°C

At all values of anode dissipation and frequencies forced-air cooling of the seals is necessary to ensure that the maximum seal temperatures are not exceeded. Typical values of inlet temperature, rate of flow of air, and pressure difference between the inlet and outlet of the housing are given in the following table:—

Anode dissipation P_a (W)	Height above sea level h (km)	h (ft)	Max. inlet temperature T_{in} (°C)	Min. rate of flow of air per minute (m^3)	(ft^3)	Pressure difference between inlet and outlet (mm of water)	(in. of water)
400	0	0	45	0.65	23	12	0.47
400	1500	4920	35	0.65	23	12	0.47
400	3000	9840	25	0.65	23	12	0.47

TD2-400A

DISC SEAL TRIODE

CLASS 'C' TELEGRAPHY OR F.M. TELEPHONY

Limiting values (absolute ratings)

f max.	470	600	900	Mc/s
V_a max.	2.2	2.1	2.1	kV
p_a max.		400		W
I_k max.		520		mA
$i_{k(pk)}$ max.		2.7		A
$-V_g$ max.		300		V
I_g max.		120		mA
R_{g-f} max.		10		kΩ

Typical operation (grounded grid)

f	470	640	730	810	Mc/s
V_a	2.0	1.8	1.8	1.8	kV
I_a	400	400	400	400	mA
V_g	–140	–120	–120	–120	V
I_g	120	100	100	100	mA
$P_{load(driver)}$	120	105	105	105	W
p_a	290	310	340	392	W
η_a	63.5	57	53	45.5	%
*P_{out}	510+85	410+80	380+80	328+80	W
P_{load} ($\eta_{transfer}$ = 80%)	476	392	368	330	

*Includes power transferred from driver stage.

CLASS 'C' OSCILLATOR FOR R.F. INDUSTRIAL HEATING

Anode supply from transformer without intermediate rectifier

Limiting values (absolute ratings)

f max.	470	Mc/s
$V_{tr(r.m.s.)}$ max.	2.0	kV
p_a max.	170	W
I_k max.	295	mA
$i_{k(pk)}$ max.	2.3	A
$-V_g$ max.	300	V
I_g max.	85	mA
R_{g-f} max.	5.0	kΩ

Typical operation (grounded grid)

f	470	Mc/s
$V_{tr(r.m.s.)}$	1.8	kV
I_a	190	mA
I_g	70	mA
R_{g-f}	400	Ω
p_a	150	W
η_a	60	%
P_{out}	230	W
P_{load} (0.85 P_{out}–P_{drive})	160	W

CLASS 'C' OSCILLATOR FOR R.F. INDUSTRIAL HEATING

With d.c. anode supply

Limiting values (absolute ratings)

f max.	470	900	Mc/s
V_a max.	2.2	2.0	kV
p_a max.		400	W
I_k max.		520	mA
$i_{k(pk)}$ max.		2.7	A
$-V_g$ max.		300	V
I_g max.		120	mA
R_{g-f} max.		10	kΩ

Typical operation

f	470	810	Mc/s
V_a	2.0	1.8	kV
I_a	380	380	mA
*I_g	110	110	mA
R_{g-f}	1.0	1.0	kΩ
p_a	280	400	W
η_a	63	41	%
P_{out}	480	284	W
P_{load} (0.85 P_{out}–P_{drive})	340	200	W

*Using a current stabilising device as the grid resistance.

TD2-400A

DISC SEAL TRIODE

WEIGHT

Valve only	5.5	oz
	157	gm
Shipping weight	9.0	oz
	250	gm

DIMENSIONS

	Inches	*Millimetres*	
A	1.433±0.008	36.4±0.2	
B	1.0±0.008	25.4±0.2	
C	0.354±0.008	9.0±0.2	
D	1.626±0.008	41.3±0.2	
E	0.472	12	
F	0.236	6.0	
G	0.669±0.020	17±0.5	
H	0.925±0.039	23.5±1.0	
J	0.158	4.0	
K	0.551±0.020	14±0.5	
L	2.992	76	max.
M	1.024	26	

TD2-400A

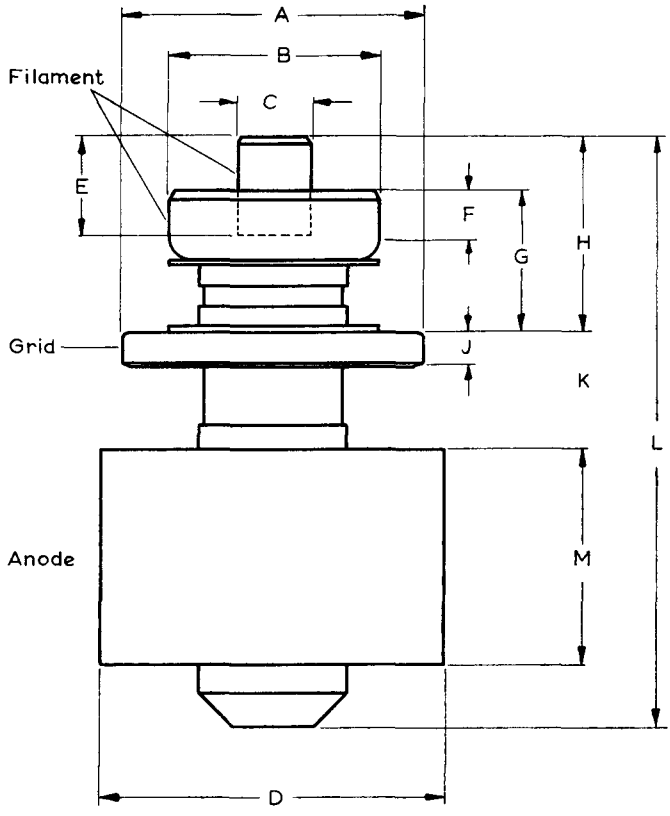

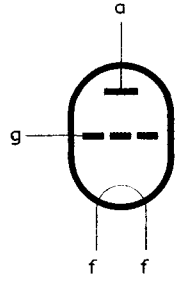

6314

TD2-400A

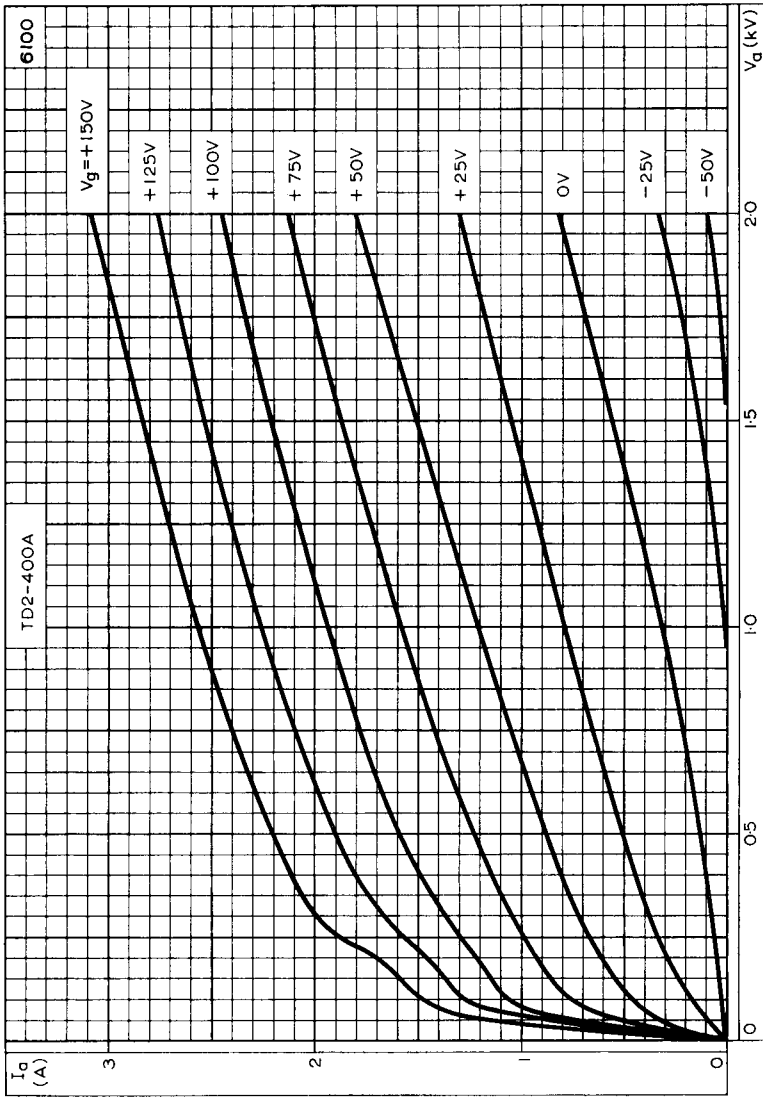

ANODE CURRENT PLOTTED AGAINST ANODE VOLTAGE WITH GRID VOLTAGE AS PARAMETER

TD2-400A

DISC SEAL TRIODE

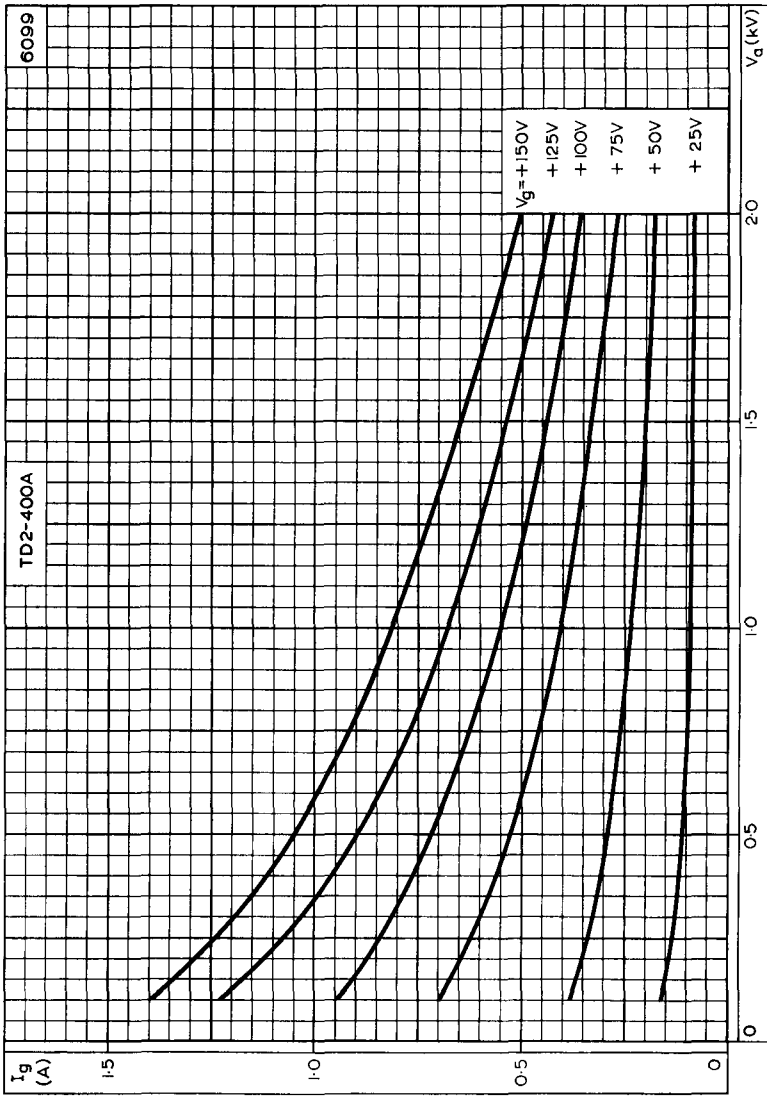

GRID CURRENT PLOTTED AGAINST ANODE VOLTAGE WITH GRID VOLTAGE AS PARAMETER

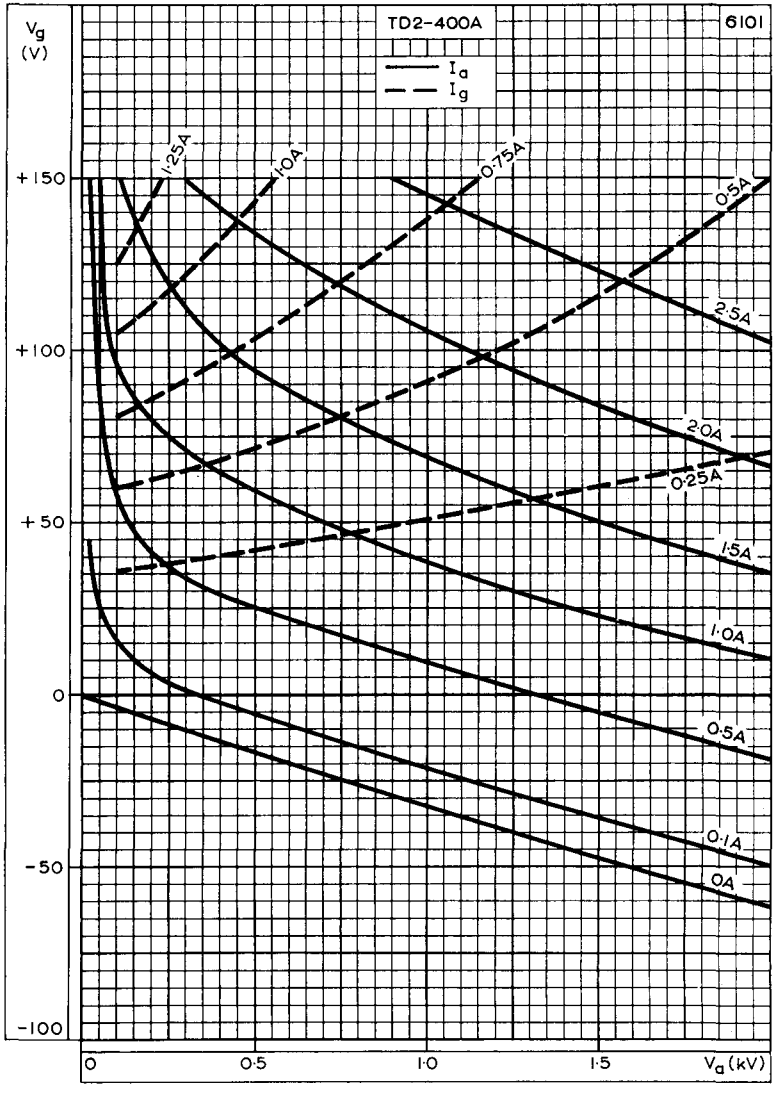

CONSTANT CURRENT CURVES

Typical operation (grounded grid)

f	470	Mc/s
$V_{tr(r.m.s.)}$	1.8	kV
I_a	190	mA
I_g	70	mA
R_{g-f}	400	Ω
p_a	150	W
η_a	60	%
P_{out}	230	W
P_{load} (0.85 P_{out}–P_{drive})	160	W

CLASS 'C' OSCILLATOR FOR R.F. INDUSTRIAL HEATING

With d.c. anode supply

Limiting values (absolute ratings)

f max.	470	900	Mc/s
V_a max.	2.2	2.0	kV
p_a max.		400	W
I_k max.		520	mA
$i_{k(pk)}$ max.		2.7	A
$-V_g$ max.		300	V
I_g max.		120	mA
R_{g-f} max.		10	kΩ

Typical operation

f	470	810	Mc/s
V_a	2.0	1.8	kV
I_a	380	380	mA
*I_g	110	110	mA
R_{g-f}	1.0	1.0	kΩ
p_a	280	400	W
η_a	63	41	%
P_{out}	480	284	W
P_{load} (0.85 P_{out}–P_{drive})	340	200	W

*Using a current stabilising device as the grid resistance.

TD2-400A

DISC SEAL TRIODE

WEIGHT

Valve only	5.5	oz
	157	g
Shipping weight	9.0	oz
	250	g

DIMENSIONS

	Inches	*Millimetres*		
A	1.433±0.008	36.4±0.2		
B	1.0±0.008	25.4±0.2		
C	0.354±0.008	9.0±0.2		
D	1.626±0.008	41.3±0.2		
E	0.472	12		
F	0.236	6.0		
G	0.669±0.020	17±0.5		
H	0.925±0.039	23.5±1.0		
J	0.158	4.0		
K	0.551±0.020	14±0.5		
L	3.268	83	max.	←
M	1.024	26		
N	0.158	4.0		←
O	4 millimetre metric thread			←

TD2-400A

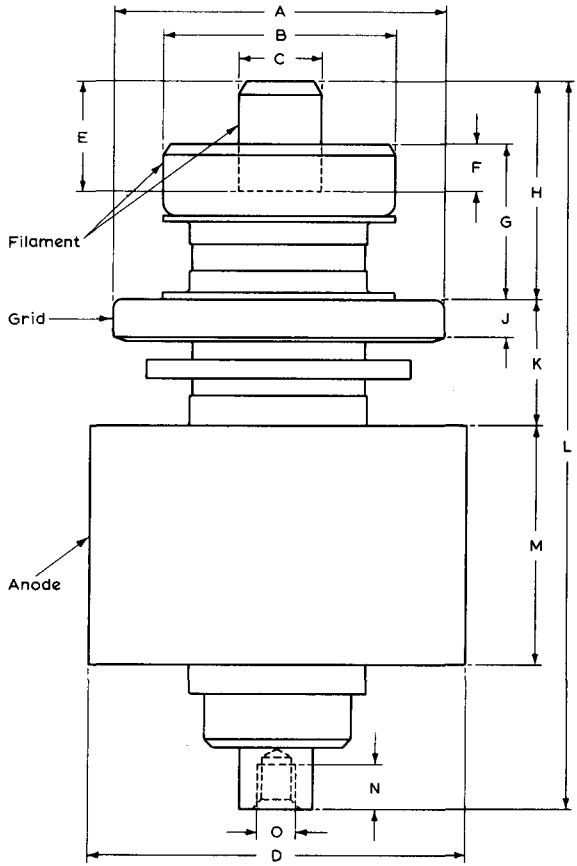

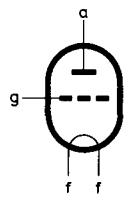

8119