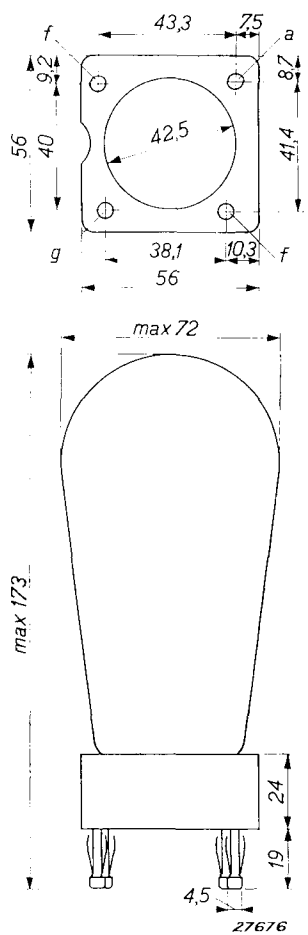

PHILIPS

TRANSMITTING VALVE

TC 1/40

PHILIPS-EMISSION

R.E. 520 E 1-48

PHILIPS

PHILIPS-EMISSION

Description

This triode valve has an oxide-coated filament characterised by its extremely low filament current consumption and its high emission.

The anode dissipation may be raised to the comparatively high value of 40 watts; the mean value of the anode current may attain 80 milliamps.

The input and output are indicated in the table below for different values of the efficiency.

Efficiency	Input	Output	Anode dissipation
40 %	65 watts	25 watts	40 watts
50 %	80 watts	40 watts	40 watts
60 %	80 watts	48 watts	32 watts
70 %	80 watts	56 watts	24 watts

The valve may be operated on waves down to 100 metres.

The dimensions of the valve and the position of the base-pins are indicated in the drawing.

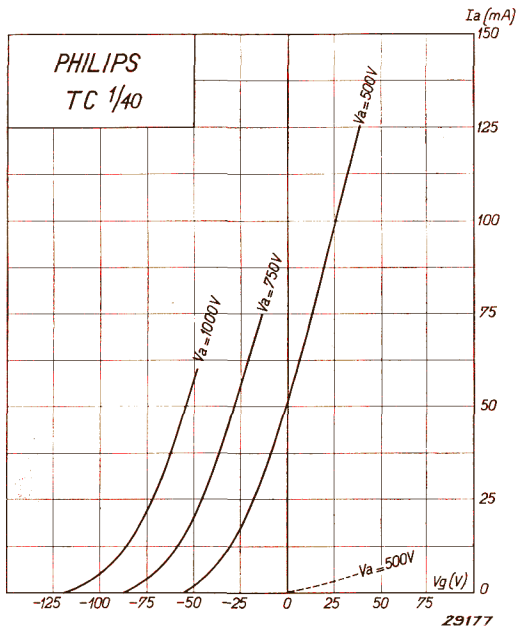

Technical Data

Filament voltage	V_f	= 6·0 V
Filament current	I_f	= appr. 1·1 A
Total emission	I_s	= appr. 0·6 A
Anode voltage	V_a	= max. 1000 V
Max. permissible anode dissipation	W_a	= 40 W
Anode dissipation during test	W_{at}	= 60 W
Amplification factor	μ	= appr. 11
Mutual conductance at I_a = 60 mA	S_{norm}	= appr. 1·6 mA/V
Max. mutual conductance	S_{max}	= appr. 2·5 mA/V
Internal resistance at I_a = 60 mA	R_i	= appr. 6500 ohms

The values of V_g plotted on the abscissa of the characteristic, apply to the negative side of the filament.