RF POWER TRIODE

QUICK REFERENCE DATA									
General purposes									
λ (m)	Freq. (MHz)	C telegr.		B teleph.		C_a mod.		B mod. [1])	
		V_a (kV)	W_o (kW)	V_a (kV)	W_o (kW)	V_a (kV)	W_o (kW)	V_a (kV)	W_o (kW)
4	75	6	6.9	6	1.9			6	13.3
		5	5.6	5	1.45	5	4.7	5	6.6
		4	4			4.5	4.1	4.5	6.0
						4	3.5	4	5.3
						3.5	3	3.5	4.6
						3	2.2	3	3.3

Television service					
Freq. (MHz)	Neg. mod. Pos. sync.			Pos. mod. Neg. sync.	
	V_a (kV)	W_o sync (kW)	W_o black (kW)	V_a (kV)	W_o white (kW)
75	5	9	5.35	5	9

HEATING: direct, filament thoriated tungsten

Filament voltage	V_f	12.6	V
Filament current	I_f	33	A

CAPACITANCES

Anode to all other elements except grid	C_a	0.3	pF
Grid to all other elements except anode	C_g	16	pF
Anode to grid	C_{ag}	11	pF

[1]) Two tubes

TYPICAL CHARACTERISTICS

Anode voltage	V_a	4	kV
Anode current	I_a	1	A
Mutual conductance	S	17	mA/V
Amplification factor	μ	32	

COOLING: water/low-velocity air flow

Table 1 Water cooling characteristics

W_a (kW)	T_i (°C)	q_{min} 1) (l/min)	ΔP (kPa)*	max. outlet temperature T_o (°C)
1	20	2.5	8	28
	50	3	10	57
2	20	2.5	8	34
	50	5	30	57
4	20	4	18	36
	50	9	90	57
6	20	6	40	31
	50	14	250	55

It is necessary to direct a low-velocity air flow to the anode and the grid seal at frequencies above 30 MHz
The air flow must be started upon or before application of the filament voltage

TEMPERATURE LIMITS (Absolute limits)

Water inlet temperature	T_i	max.	50	°C
Temperature of seals	T	max.	180	°C

1) At inlet temperatures between 20 and 50 °C the required quantity of water can be found by proportional interpolation

* 100 kPa ≈ 1 at

MECHANICAL DATA

Dimensions in mm

Mounting position: vertical with anode down

Net mass: 0.45 kg

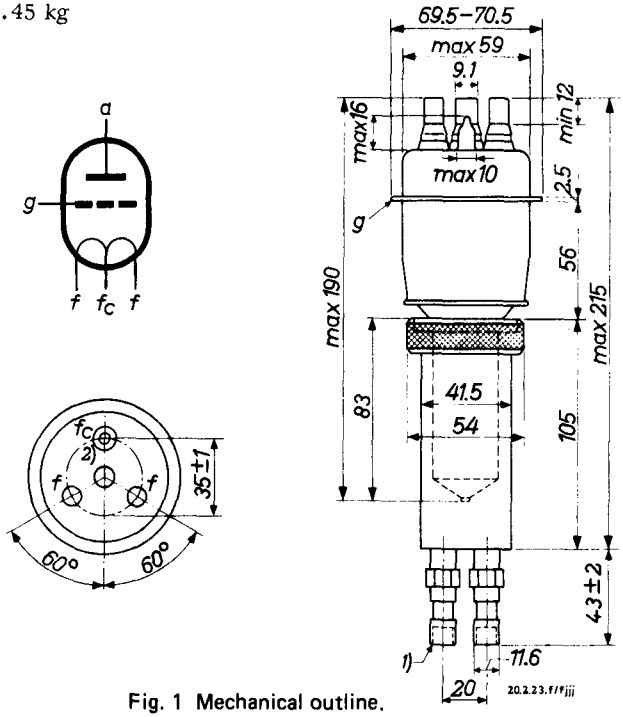

Fig. 1 Mechanical outline.

Tube mounted in water jacket K713

The centre tap f_c must not be used for filament current supply. The connectors type 40634, however, must be used for the cooling of all three filament pins, thus also of pin f_c

ACCESSORIES

Grid connector	type	40650 [3] or 40622
Water jacket		K713
Filament connector		40634
"O" ring		3322 026 82801

---

1) 1/8 in pipe thread

2) This pin is marked "O"

3) The connector 40650 should be used only below 30 MHz.
When the tube is used with this connector at maximum ratings additional cooling of the grid seals will be required.

RF CLASS C TELEGRAPHY, grounded grid

LIMITING VALUES (Absolute limits)

Frequency	f	up to	75	MHz
Anode voltage	V_a	max.	6	kV
Negative grid voltage	$-V_g$	max.	1000	V
Anode current	I_a	max.	1.5	A
Grid current	I_g	max.	0.35	A
Grid dissipation	W_g	max.	120	W
Anode input power	W_{ia}	max.	9	kW
Anode dissipation	W_a	max.	6	kW 1)

OPERATING CONDITIONS

Wavelength	λ	4	4	4	m
Frequency	f	75	75	75	MHz
Anode voltage	V_a	6	5	4	kV
Grid voltage	V_g	-400	-300	-200	V
Anode current	I_a	1.5	1.5	1.37	A
Grid current	I_g	0.31	0.33	0.35	A
Peak grid AC voltage	V_{gp}	740	640	500	V
Grid input power	W_{ig}	210	190	160	W
Anode input power	W_{ia}	9	7.5	5.5	kW
Anode dissipation	W_a	2.1	1.9	1.5	kW
Output power	W_o	6.9	5.6	4	kW
Efficiency	η	76.5	75	73	%

1) TBL6/6000 W_a max. = 5 kW

RF CLASS C TELEGRAPHY, grounded grid

LIMITING VALUES (Absolute limits)

Frequency	f	up to	75	MHz
Anode voltage	V_a	max.	6	kV
Positive cathode to grid voltage	V_{kg}	max.	1000	V
Anode current	I_a	max.	1.5	A
Grid current	I_g	max.	0.35	A
Grid dissipation	W_g	max.	120	W
Anode input power	W_{ia}	max.	9	kW
Anode dissipation	W_a	max.	6	kW 1)

For frequencies from 75 MHz up to 220 MHz, see Fig. 4

OPERATING CONDITIONS, two tubes

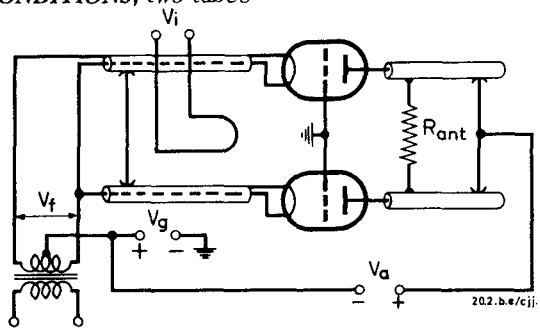

Fig. 2 Grounded grid configuration.

1) TBL6/6000 W_a max.= 5 kW

RF CLASS C TELEGRAPHY, grounded grid (continued)

OPERATING CONDITIONS, two tubes (continued)

λ	4	2.7[1])	2.7[1])	1.36[1])	m
f	75	110	110	220	MHz
V_a	6	5	4	4	kV
V_g	-400	-300	-200	-200	V
I_a	2x1.5	2x1.5	2x1.37	2x1.25	A
I_g	2x0.31	2x0.33	2x0.35	2x0.2	A
V_{gp}	740	640	500	450	V
W_{ig}	2x1120	2x920	2x675	2x380	W
W_{ia}	2x9	2x7.5	2x5.5	2x5	kW
W_a	2x2.1	2x2.2	2x1.7	2x2.5	kW
W_o	13.8+1.82	10.6+1.46	7.6+1.03	5+0.6	kW [2])
η	76.5	71	69	50	% [3])

[1]) When using the tube above 108 MHz, particular attention must be paid to a careful design of the installation, otherwise the tube may be damaged. Therefore, our guarantee for the tubes operating at frequencies above 108 MHz can only be given after approval of the installation.

[2]) Power transferred from driving stage included.

[3]) Pure tube efficiency.

RF CLASS B TELEPHONY

LIMITING VALUES (Absolute limits)

Frequency	f	up to	75	MHz
Anode voltage	V_a	max.	6	kV
Anode current	I_a	max.	1.1	A
Anode input power	W_{ia}	max.	6.6	kW
Anode dissipation	W_a	max.	6	kW 1)

OPERATING CONDITIONS

Wavelength	λ	4	4	m
Frequency	f	75	75	MHz
Anode voltage	V_a	6	5	kV
Grid voltage	V_g	-180	-145	V
Anode current	I_a	0.99	0.9	A
Peak grid AC voltage	V_{gp}	250	225	V
Anode input power	W_{ia}	5.9	4.5	kW
Anode dissipation	W_a	4	3.05	kW
Output power	W_o	1.9	1.45	kW
Efficiency	η	32	32	%
Modulation factor	m	100	100	%
Grid current	I_g	0.3	0.32	A
Grid input power	W_{ig}	140	130	W

1) TBL6/6000 W_a max. = 5 kW

RF CLASS C ANODE MODULATION

LIMITING VALUES (Absolute limits)

Frequency	f	up to	75	MHz	
Anode voltage	V_a	max.	5	kV	
Negative grid voltage	$-V_g$	max.	1000	V	
Anode current	I_a	max.	1.3	A	
Grid current	I_g	max.	0.35	A	
Grid dissipation	W_g	max.	120	W	
Anode input power	W_{ia}	max.	6.5	kW	
Anode dissipation	W_a	max.	4	kW	2)

OPERATING CONDITIONS

Wavelength	λ	4	4	4	4	4	m
Frequency	f	75	75	75	75	75	MHz
Anode voltage	V_a	5	4.5	4	3.5	3	kV
Grid voltage	V_g	-400	-350	-300	-300	-250	V 1)
Anode current	I_a	1.2	1.2	1.2	1.2	1	A
Grid current	I_g	0.3	0.3	0.3	0.3	0.3	A
Peak grid AC voltage	V_{gp}	690	650	600	600	510	V
Grid input power	W_{ig}	190	180	165	165	140	W
Anode input power	W_{ia}	6	5.4	4.8	4.2	3	kW
Anode dissipation	W_a	1.3	1.3	1.3	1.2	0.8	kW
Output power	W_o	4.7	4.1	3.5	3.0	2.2	kW
Efficiency	η	78	76	73	71.5	73	%
Modulation factor	m	100	100	100	100	100	%
Modulation power	W_{mod}	3.0	2.7	2.4	2.1	1.5	kW

1) Grid bias partially obtained by the grid resistor
2) TBL6/6000 W_a max. = 3.4 kW

RF CLASS B TELEPHONY for television service (American and European system).

LIMITING VALUES (Absolute limits)

Frequency	f		up to 75	up to 220	MHz
Anode voltage	V_a		max. 5	max. 4	kV
Anode input power	W_{ia}	sync	max. 9.5	max. 6.5	kW
Anode dissipation	W_a	sync	max. 5	max. 4	kW
Anode current	I_a	sync	max. 1.9	max. 1.6	A
Grid dissipation	W_g	sync	max. 120	max. 120	W

OPERATING CONDITIONS, two tubes in push-pull

Frequency	f		48 to 75	170 to 220[1])	MHz
Bandwidth (-1.5 db)	B		5.25	6.5	MHz [2])
Bandwidth (-3 db)	B		8	10	MHz [2])
Anode voltage	V_a		5	4	kV
Grid voltage	V_g		-200	-150	V
Peak grid to grid voltage	V_{ggp}	sync	1000	1000	V [3])
		black	800	750	V [3])
		white	0	200	V [3])
Anode current	I_a	sync	3.8	3.2	A
		black	3	2.6	A
		white	0.2	-	A
Grid current	I_g	sync	0.5	0.4	A
		black	0.22	0.22	A
		white	0	-	A
Grid input power	W_{ig}	sync	250	350 to 450	W [4])
Output power	W_o	sync	9	6	kW
		black	5.35	3.37	kW

[1]) When using the tube above 108 MHz, particular attention must be paid to a careful design of the installation, otherwise the tube may be damaged Therefore, our guarantee for the tubes operating at frequencies above 108 MHz can only be given after approval of the installation

[2]) These values are based on measurements on a circuit with a single LC section

[3]) Measured by the slide back method

[4]) Driving power is accounted for largely by circuit losses. The indicated driving power is required to take care of losses in damping resistors, circuit losses and tube driving power

RF CLASS C OSCILLATOR FOR INDUSTRIAL USE with anode voltage from three-phase half-wave rectifier without filter

LIMITING VALUES (Absolute limits)

Frequency	f	up to	75	MHz
Anode voltage	V_a	max.	6000	V
Negative grid voltage	$-V_g$	max.	1000	V
Anode current	I_a	max.	1.5	A
Grid current	I_g	max.	0.35	A
Anode input power	W_{ia}	max.	9	kW
Anode dissipation	W_a	max.	6	kW [4]
Grid dissipation	W_g	max.	120	W

OPERATING CONDITIONS

Frequency	f	75	75	MHz
Transformer voltage, RMS	V_{tr}	5.1[1]	4.4[2]	kV
Anode voltage	V_a	6.0	5.1	kV[3]
Anode current	I_a	1.5	1.25	A
Grid current	I_g	0.31	0.28	A
Grid resistor	R_g	1300	1100	Ω
Grid input power	W_{ig}	210	160	W
Anode input power	W_{ia}	9	6.4	kW
Anode dissipation	W_a	1.9	1.74	kW
Output power	W_o	6.9	4.5	kW
Efficiency	η	76.5	70	%

[1]) Care must be taken that under these operating conditions the absolute limiting values are not exceeded by variation of the supply voltage or the load or by tolerances in the circuit elements

[2]) Under these conditions normal deviations of voltages and load are permissible. The absolute limiting values of the tube must, however, not be exceeded

[3]) DC value

[4]) TBL6/6000 W_a max. 5 kW

RF CLASS C OSCILLATOR FOR INDUSTRIAL USE with self rectification

LIMITING VALUES (Absolute limits)

Frequency	f	up to	75	MHz
Transformer voltage, RMS	V_{tr}	max.	6800	V
Negative grid voltage	$-V_g$	max.	640	V
Anode current	I_a	max.	0.8	A
Grid current	I_g	max.	0.19	A
Anode input power	W_{ia}	max.	9	kW
Anode dissipation	W_a	max.	6	kW 3)
Grid dissipation	W_g	max.	120	W

OPERATING CONDITIONS

Frequency	f	75	75	MHz
Transformer voltage, RMS	V_{tr}	6.8 1)	5.9 2)	kV
Anode current	I_a	0.8	0.7	A
Grid current	I_g	0.19	0.165	A
Grid resistor	R_g	1050	1050	
Grid input power	W_{ig}			W
Anode input power	W_{ia}	6.05	4.6	kW
Anode dissipation	W_a	1.5	1.24	kW
Output power	W_o	4.55	3.36	kW
Efficiency	η	75	73	%

1) Care must be taken that under these operating conditions the absolute limiting values are not exceeded by variation of the supply voltage or the load or by tolerances in the circuit elements

2) Under these conditions normal deviations of voltages and load are permissible. The absolute limiting values of the tube must, however, not be exceeded

3) TBL6/6000 W_a max. = 5 kW

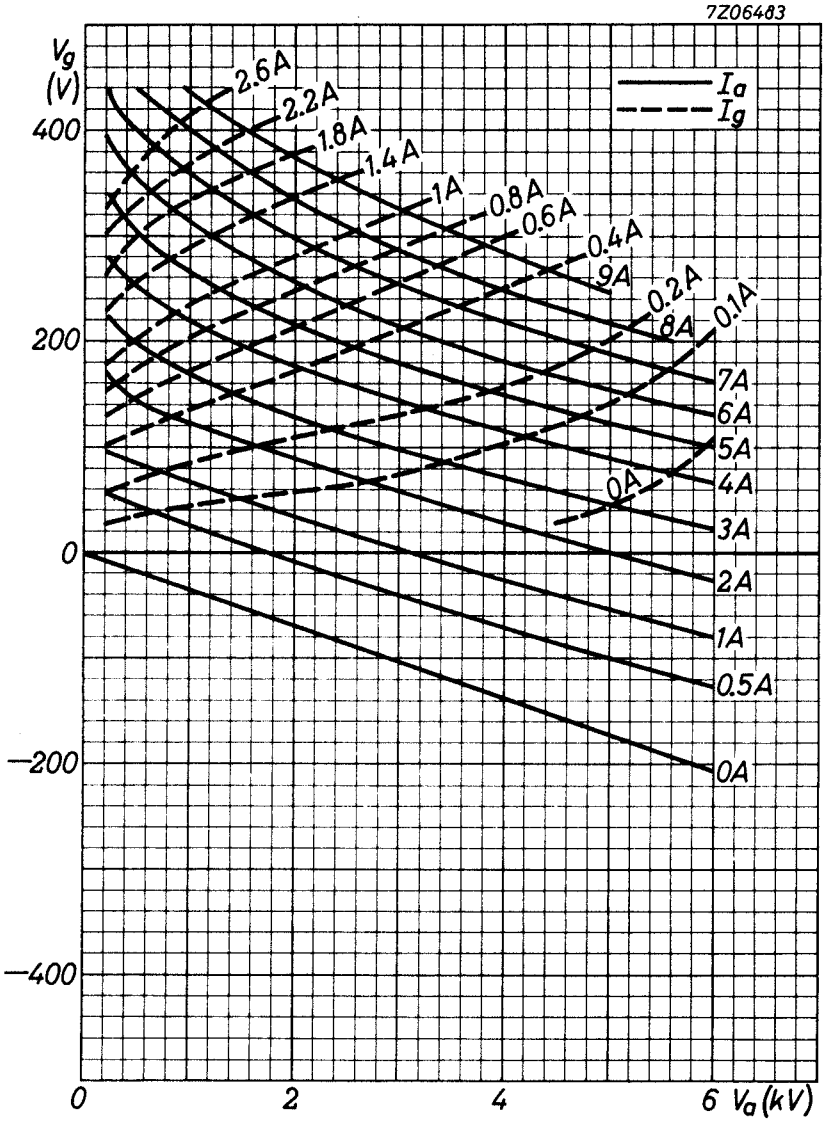

Fig. 3 Constant current characteristics.

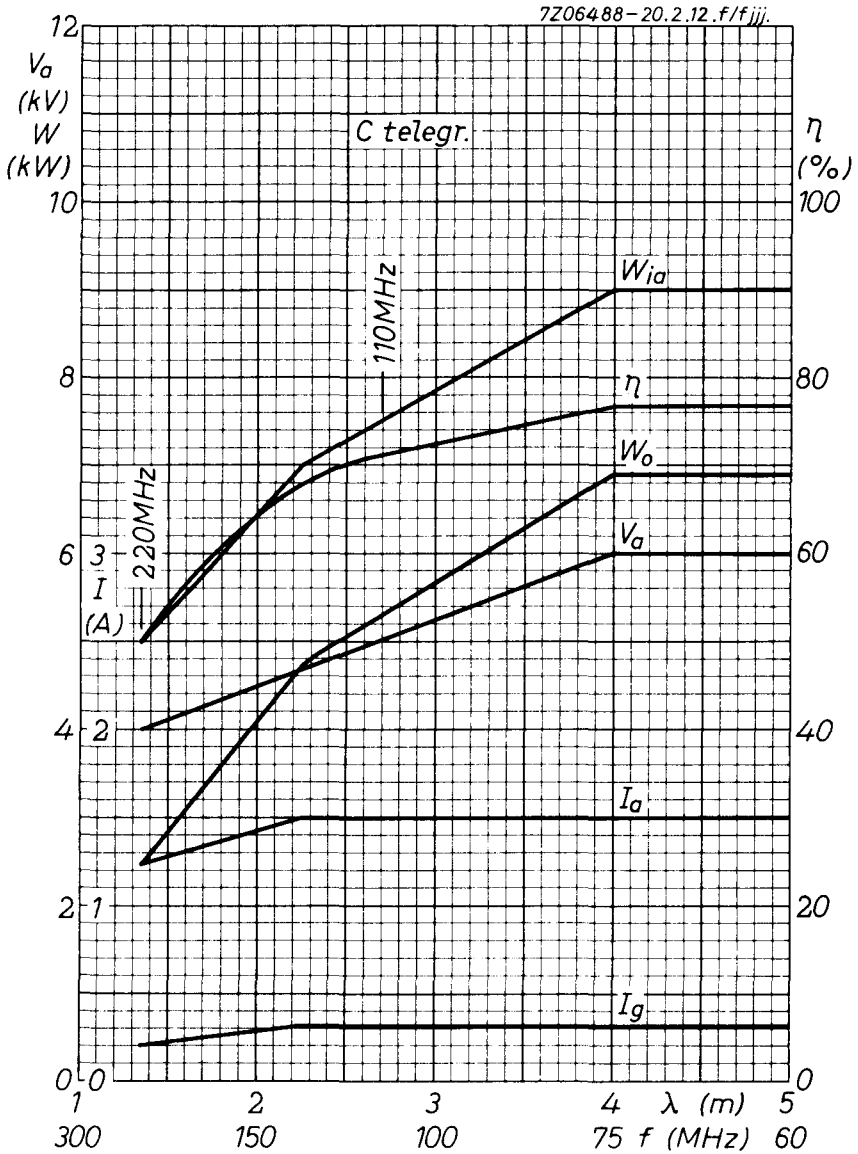

Fig. 4 Frequency dependant characteristics.

PHILIPS

Data handbook

Electronic components and materials

TBW6/6000

page	sheet	date
1	143	1988.02
2	144	1988.02
3	145	1988.02
4	146	1988.02
5	147	1988.02
6	148	1988.02
7	149	1988.02
8	150	1988.02
9	151	1988.02
10	152	1988.02
11	153	1988.02
12	154	1988.02
13	155	1988.02
14	FP	2000.09.22