RF POWER TRIODE

- Water cooled

QUICK REFERENCE DATA

Industrial RF oscillator; class-C

freq.	three phase	
	V_a	W_o
MHz	kV	kW
30	12	29,0
	10	23,3
	8	17,9

HEATING: direct; thoriated tungsten filament

Filament voltage	V_f	=	8,0 V
Filament current	I_f	=	98 A
Cold filament resistance	R_{fo}	=	0,008 Ω

The filament is designed to accept temporary fluctuations of +5% and −10%

The filament current must never exceed a peak value of 210 A instantaneously at any time during the initial energizing schedule.

CAPACITANCES

Anode to all other elements except grid	C_a	=	0,4 pF
Grid to all other elements except anode	C_g	=	37 pF
Anode to grid	C_{ag}	=	30 pF

TYPICAL CHARACTERISTICS

Anode voltage	V_a	=	12 kV
Anode current	I_a	=	2 A
Mutual conductance	S	=	20 mA/V
Amplification factor	μ	=	34

TEMPERATURE LIMIT (Absolute limit)

Seal temperature	max.	220 °C

Generally, a low velocity air flow to the seals is required.

Table 1 Water cooling characteristics

T_i = max. 50 °C

W_a (kW)	T_i (°C)	q_{min} [1] (l/min)	ΔP (kPa)*	max. outlet temperature T_o (°C)
5	20	6	2	35
	50	15	22	56
10	20	11	10	35
	50	25	70	56
15	20	16	25	35
	50	37	130	56
20	20	22	50	35
	50	49	230	56

To ensure a uniform RF current distribution in the grid seal especially at frequencies higher than 4 MHz, the grid lead should be connected as shown below.

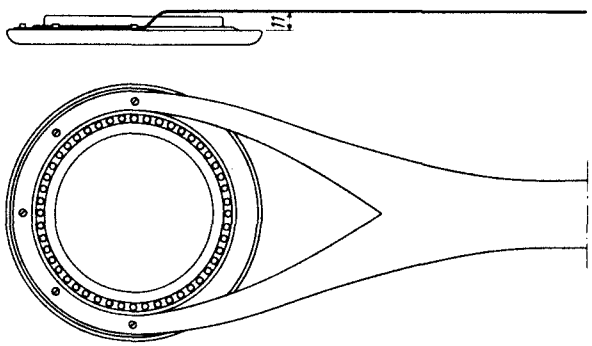

Fig. 1 Grid lead detail.

[1]) At inlet temperatures between 20 and 50 °C the required quanity of water can be found by proportional interpolation

* 100 kPa ≈ 1 at

MECHANICAL DATA

Dimensions in mm

Net weight of the tube : 2.8 kg

Net weight of water jacket: 2.1 kg

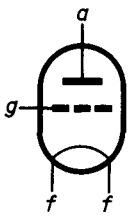

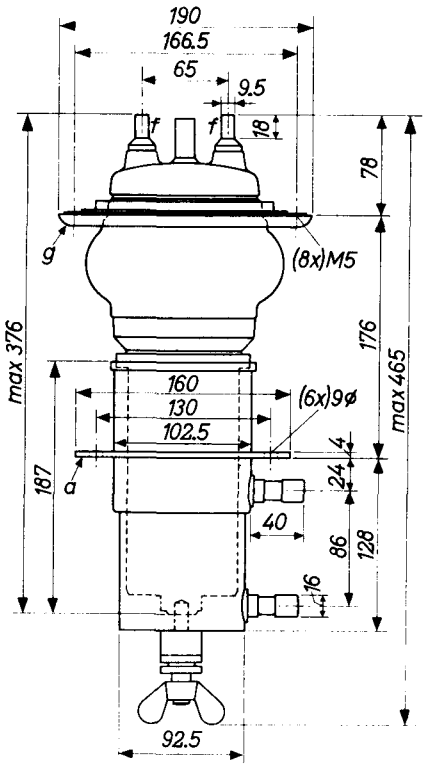

Fig. 2 Mechanical outline.

Tube with grid connector
and water jacket

Mounting position: vertical with anode down

ACCESSORIES

Filament connectors with cable		: 40662
Grid connector		: 40663
Water jacket		: K717
O-ring	large	: 2622 080 30895
	small	: 2622 080 30736

RF CLASS C OSCILLATOR FOR INDUSTRIAL USE with anode voltage from three-phase half-wave rectifier without filter

LIMITING VALUES (Absolute limits)

Frequency		f		up to	30	MHz
Anode voltage		V_a	=	max.	13	kV
Anode current		I_a	=	max.	4.8	A
Anode dissipation		W_a	=	max.	20	kW
Anode input power		W_{ia}	=	max.	60	kW
Negative grid voltage		$-V_g$	=	max.	1500	V
Grid current		I_g	=	max.	0.8	A
Grid circuit resistance		R_g	=	max.	10	kΩ

OPERATING CONDITIONS

Frequency	f	=	30	30	30	MHz
Transformer voltage	V_{tr}	=	8.9	7.4	6.0	kV
Anode voltage	V_a	=	12	10	8	kV
Anode current, loaded	I_a	=	3.2	3.2	3.2	A
Anode current, unloaded	I_a	=	0.52	0.50	0.48	A
Grid current, loaded	I_g	=	0.50	0.50	0.50	A
Grid current, unloaded	I_g	=	0.74	0.77	0.80	A
Grid resistor	R_g	=	2.0	1.6	1.1	kΩ
Load resistance	$R_{a\sim}$	=	1800	1450	1100	Ω
Feedback ratio under loaded conditions	$V_{g\sim}/V_{a\sim}$	=	16	17	19	%
Anode input power	W_{ia}	=	38.4	32.0	25.6	kW
Anode dissipation	W_a	=	9.4	8.7	7.7	kW
Output power	W_o	=	29.0	23.3	17.9	kW
Efficiency	η	=	75.5	72.5	70	%
Output power in the load	W_ℓ	=	25	20	15.5	kW[1]

[1]) Useful power in the load measured in a circuit having an efficiency of 90%

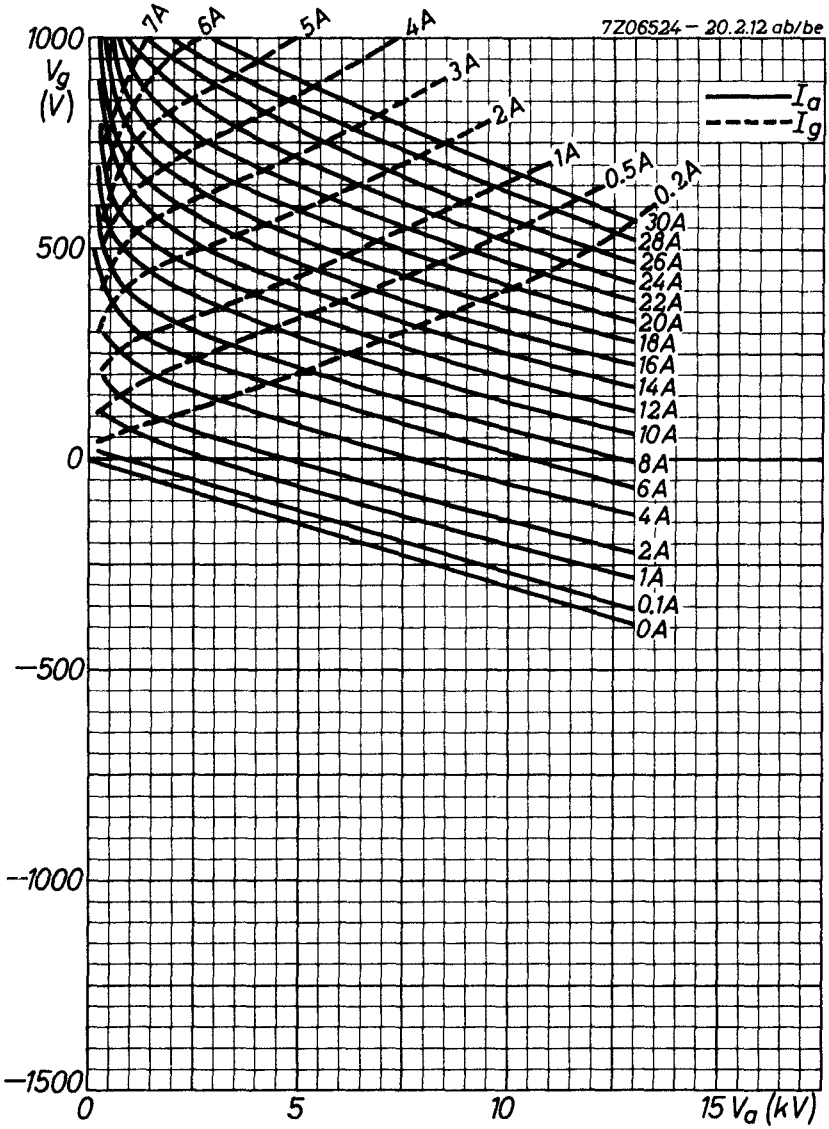

Fig. 3 Constant current characteristics.

PHILIPS

Data handbook

Electronic components and materials

TBW12/25

page	sheet	date
1	165	1988.02
2	166	1988.02
3	167	1988.02
4	168	1988.02
5	169	1988.02
6	FP	2000.09.22