WATER COOLED INDUSTRIAL R.F. POWER TRIODE WITH INTEGRAL HELICAL COOLER

QUICK REFERENCE DATA		
Industrial R.F. oscillator class C		
Freq.	Three phase	
(MHz)	V_a (kV)	W_ℓ [1] (kW)
50	7.2 6.2	6.1 5.0

HEATING: direct; filament thoriated tungsten

Filament voltage	V_f	=	12.6	V	+5 % -10 %
Filament current	I_f	=	33	A	

CAPACITANCES

Anode to all other elements except grid	C_a	=	1.0	pF
Grid to all other elements except anode	C_g	=	14.2	pF
Anode to grid	C_{ag}	=	7.9	pF

TYPICAL CHARACTERISTICS

Anode voltage	V_a	=	6	kV
Anode current	I_a	=	1	A
Mutual conductance	S	=	12	mA/V
Amplification factor	μ	=	24	

[1]) Useful power in the load

7Z2 8646

TEMPERATURE LIMITS (Absolute limits)

Water inlet temperature t_i = max. 50 °C

Temperature of the seals = max. 220 °C

WATER COOLING CHARACTERISTICS

W_a (kW)	t_i (°C)	q_{min} (l/min)	p_i (atm)	t_o (°C)
2	20	1	0.032	56
	50	2	0.084	68
4	20	2.2	0.10	49
	50	4.4	0.49	65
6	20	4	0.41	43
	50	8	1.4	62

At water inlet temperatures between 20 and 50 °C the required quantity of water can be found by linear interpolation.

At frequencies above 4 MHz a low velocity air flow should be directed to the seals.

At frequencies above 4 MHz both grid terminals should be connected in parallel and care should be taken to distribute the R.F. current equally over both grid terminals to avoid excessive temperatures.

→ **ACCESSORIES**

Filament and grid connectors (4 required) type 40634

MECHANICAL DATA

Dimensions in mm

Net weight 1 kg

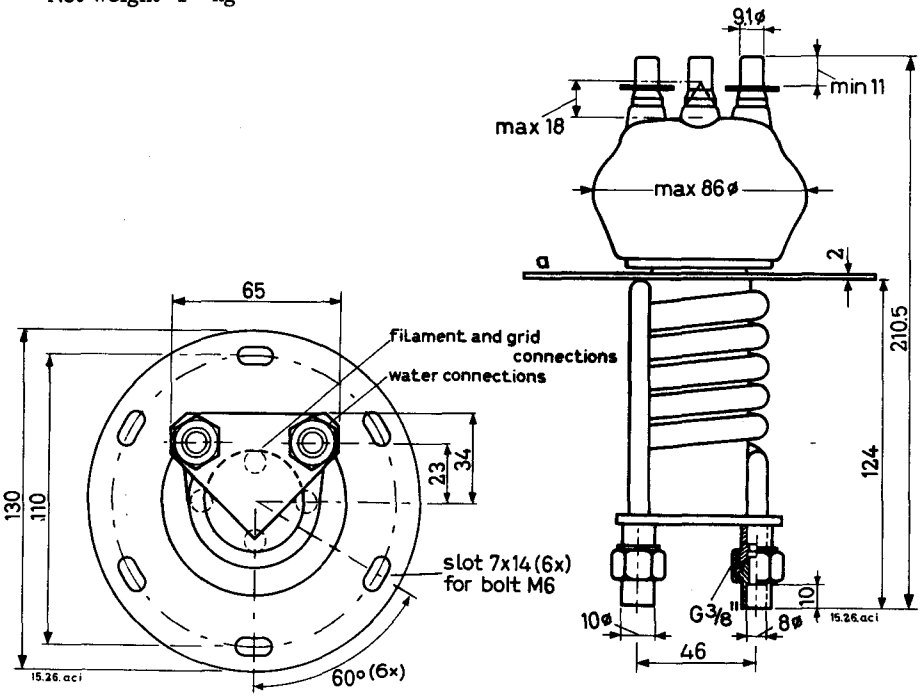

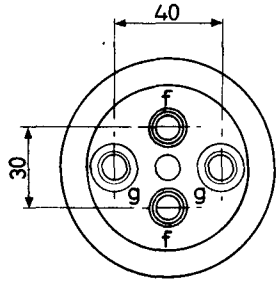

The use of wing nuts for connecting the water connections should be avoided

Mounting position: vertical with anode down

R.F. CLASS C OSCILLATOR FOR INDUSTRIAL USE with anode voltage from three-phase rectifier without filter

LIMITING VALUES (Absolute limits), continuous service

Frequency	f		up to	50	MHz
Anode voltage	V_a	=	max.	8	kV
Anode input power	W_{ia}	=	max.	12	kW
Anode dissipation	W_a	=	max.	6	kW
Anode current	I_a	=	max.	1.8	A
Negative grid voltage	$-V_g$	=	max.	1250	V
Grid current, loaded	I_g	=	max.	0.4	A
Grid current, unloaded	I_g	=	max.	0.5	A
Grid circuit resistance	R_g	=	max.	10	kΩ

OPERATING CHARACTERISTICS , continuous service

Frequency	f	=	50	50	MHz
Anode voltage	V_a	=	7200	6200	V
Anode current, loaded	I_a	=	1.5	1.4	A
Anode current, unloaded	I_a	=	0.37	0.40	A
Grid current, loaded	I_g	=	0.36	0.37	A
Grid current, unloaded	I_g	=	0.47	0.47	A
Grid resistor	R_g	=	1850	1500	Ω
Load resistance	$R_{a\sim}$	=	2300	2100	Ω
Feedback ratio under loaded conditions	$V_{g\sim}/V_{a\sim}$	=	17	17	%
Anode input power	W_{ia}	=	10.8	8.68	kW
Anode dissipation	W_a	=	3.3	2.5	kW
Efficiency	η	=	70	71	%
Output power in the load	W_ℓ	=	6.1	5.0	kW [1]

[1]) Useful power in the load, measured in a circuit having an efficiency of 85 %

7Z2 3540

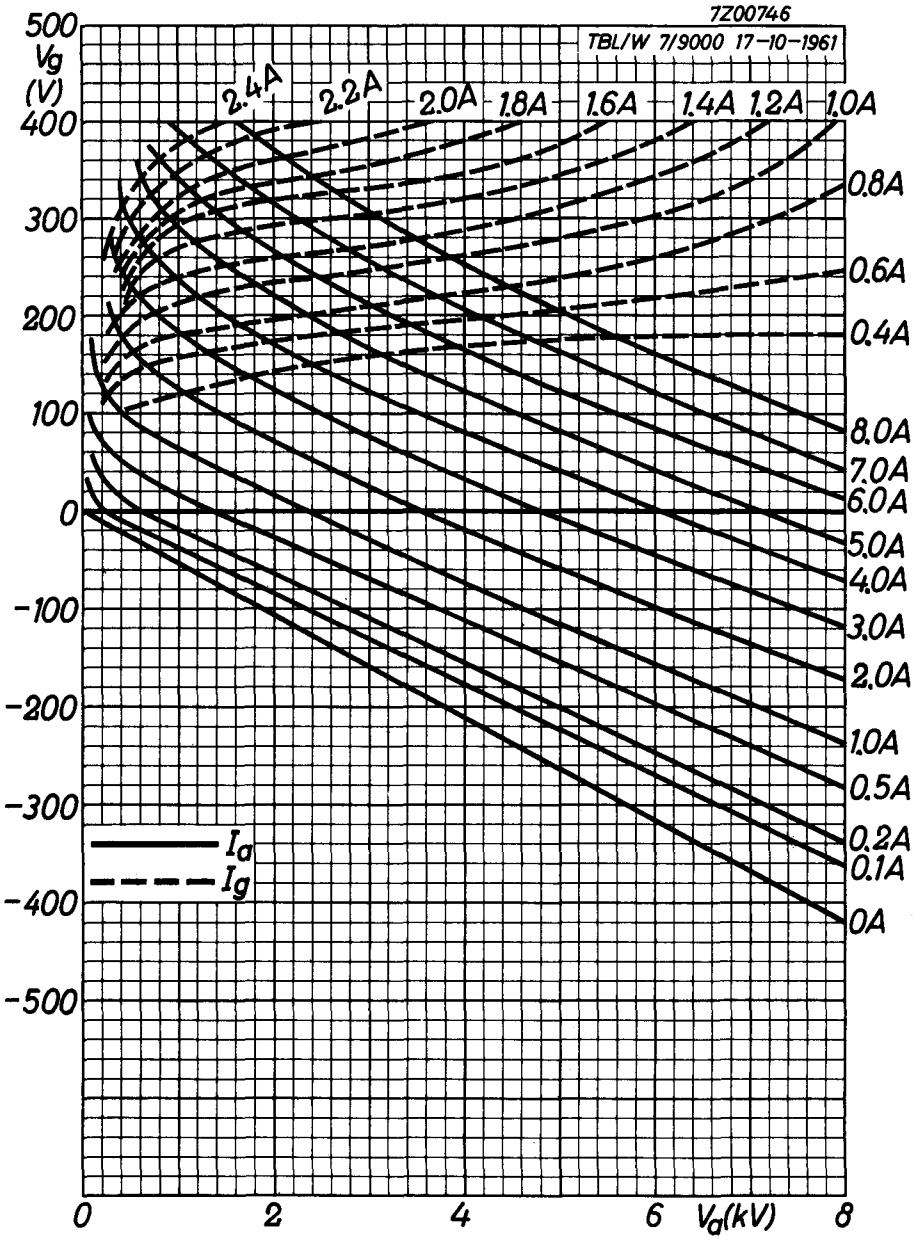
7Z00746
TBL/W 7/9000 17-10-1961
500
Vg
(V)
400
300
200
100
0
-100
-200
-300
-400
-500
2.4A
2.2A
2.0A
1.8A
1.6A
1.4A
1.2A
1.0A
0.8A
0.6A
0.4A
8.0A
7.0A
6.0A
5.0A
4.0A
3.0A
2.0A
1.0A
0.5A
0.2A
0.1A
0A
Ia
Ig
0
2
4
6
Va(kV)
8