WATER COOLED INDUSTRIAL R.F. POWER TRIODE WITH INTEGRAL HELICAL COOLER

QUICK REFERENCE DATA		
Freq. (MHz)	C osc. industrial	
	V_a (kV)	W_o (kW)
30	12	39
	10	31.3
	8	23.2

HEATING: direct; filament thoriated tungsten

Filament voltage	V_f	=	8	V	+ 5 % / −10 %
Filament current	I_f	=	130	A	
Cold filament resistance	R_f	=	0.006	Ω	

The filament current must never exceed a peak value of 280 A at any time during the initial energizing schedule

CAPACITANCES

Anode to all other elements except grid	C_a	=	0.9	pF
Grid to all other elements except anode	C_g	=	45	pF
Anode to grid	C_{ag}	=	23.5	pF

TYPICAL CHARACTERISTICS

Anode voltage	V_a	=	12	kV
Anode current	I_a	=	2	A
Amplification factor	μ	=	21	
Mutual conductance	S	=	25	mA/V

TEMPERATURE LIMITS (Absolute limits)

Temperature of all seals = max. 220 °C

Water inlet temperature t_i = max. 50 °C

7Z2 8649

COOLING: Generally a low velocity air flow to the seals is required

WATER COOLING CHARACTERISTICS

W_a (kW)	t_i (°C)	q_{min} (l/min)	p_i (atm.)
10	20	4.2	0.08
	50	8.4	0.27
15	20	6.5	0.16
	50	13.0	0.5
20	20	9.3	0.3
	50	18.6	1.0

At water inlet temperatures between 20 °C and 50 °C the required quantity of water can be found by linear interpolation

MECHANICAL DATA Dimensions in mm

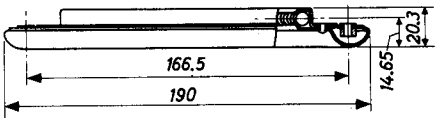

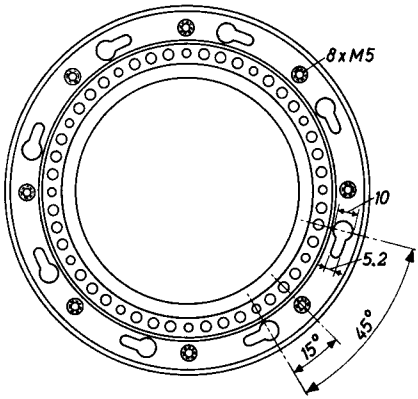

Grid connector 40663

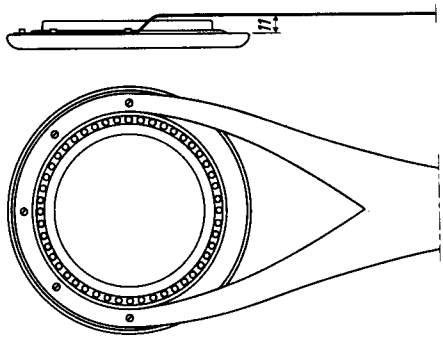

Connection of the grid lead

The rounded side of the grid connector should face the anode. To ensure a uniform RF current distribution in the grid seal at frequencies higher than 4 MHz, the grid lead should be connected as shown in the figure at right.

7Z2 3567

MECHANICAL DATA (continued)

Dimensions in mm

Connectors with cable for filament : 40662

Grid connector 40663

Net weight : 5.4 kg

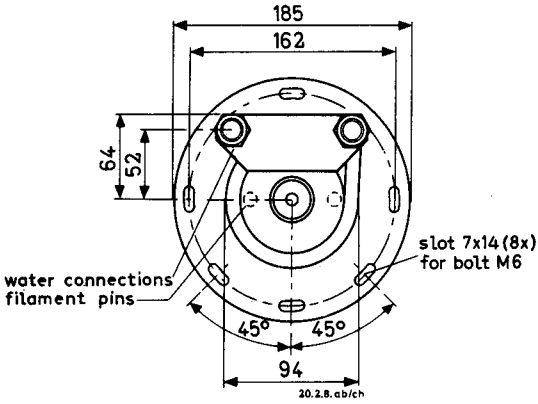

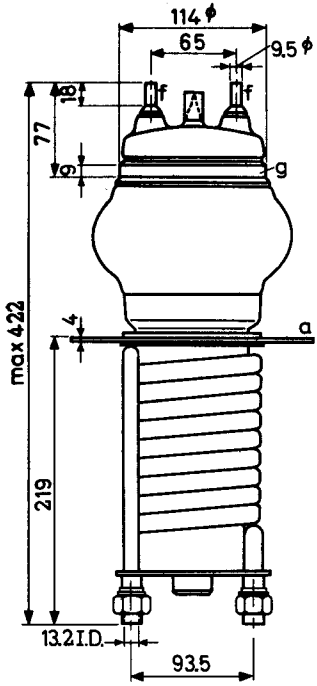

Mounting position: vertical with anode down

R.F. CLASS C OSCILLATOR FOR INDUSTRIAL USE with anode voltage from three-phase rectifier without filter

LIMITING VALUES (Absolute limits)

Frequency	f		up to	30	MHz
Anode voltage	V_a	=	max.	13	kV
Anode current	I_a	=	max.	5	A
Anode dissipation	W_a	=	max.	20	kW
Anode input power	W_{ia}	=	max.	60	kW
Negative grid voltage	$-V_g$	=	max.	2	kV
Grid current, loaded	I_g	=	max.	1.5	A
Grid current, unloaded	I_g	=	max.	2.0	A
Grid circuit resistance	R_g	=	max.	10	kΩ

OPERATING CONDITIONS

Frequency	f	=	30	30	30	MHz
Anode voltage	V_a	=	12	10	8	kV
Anode current, loaded	I_a	=	4.5	4.5	4.5	A
Anode current, unloaded	I_a	=	0.65	0.63	0.62	A
Grid current, loaded	I_g	=	0.9	0.9	0.9	A
Grid current, unloaded	I_g	=	1.22	1.3	1.35	A
Grid resistor	R_g	=	1100	1000	900	Ω
Load resistance	$R_{a\sim}$	=	1450	1100	800	Ω
Feedback ratio under loaded conditions	$V_{g\sim}/V_{a\sim}$	=	16	19	24	%
Anode input power	W_{ia}	=	54	45	36	kW
Anode dissipation	W_a	=	15	13.7	12.8	kW
Output power	W_o	=	39	31.3	23.2	kW
Efficiency	η	=	72.5	70	64.5	%
Output power in the load	W_ℓ	=	30	25	18	kW[1]

[1] Useful power in the load, measured in a circuit having an efficiency of about 85%.

7Z2 3565

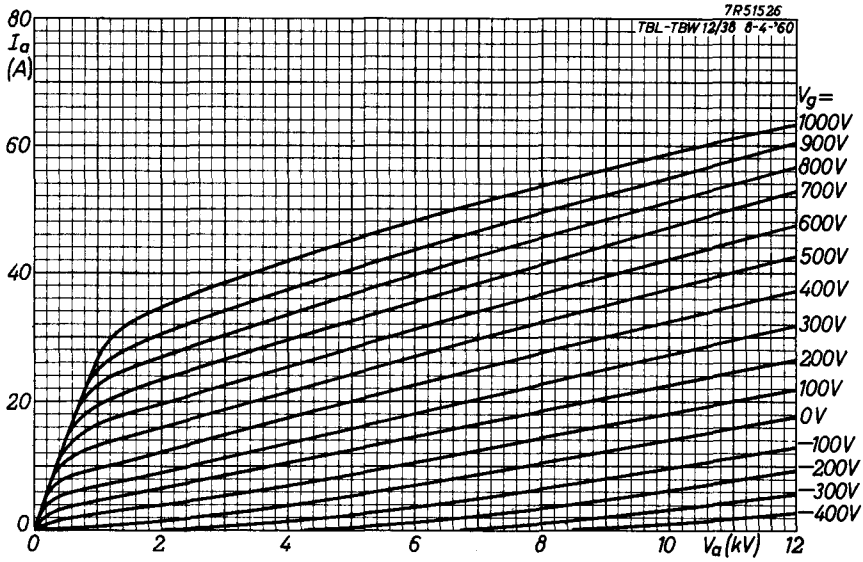
7R51526
TBL-TBW 12/38 8-4-'60
I_a (A)
80
60
40
20
0
0
2
4
6
8
10
V_a (kV)
12
V_g=
1000V
900V
800V
700V
600V
500V
400V
300V
200V
100V
0V
−100V
−200V
−300V
−400V

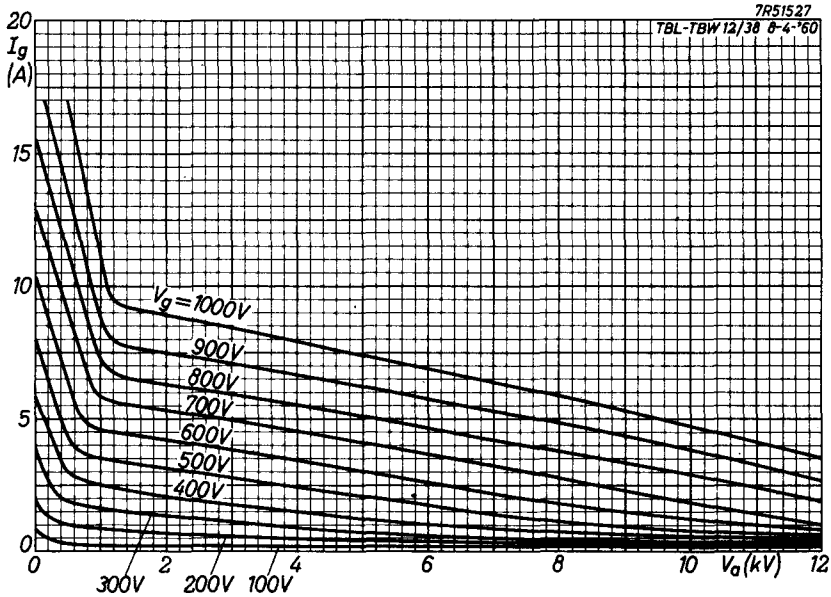
7R51527
TBL-TBW 12/38 8-4-'60
I_g (A)
20
15
10
5
0
0
2
4
6
8
10
V_a (kV)
12
V_g=1000V
900V
800V
700V
600V
500V
400V
300V
200V
100V

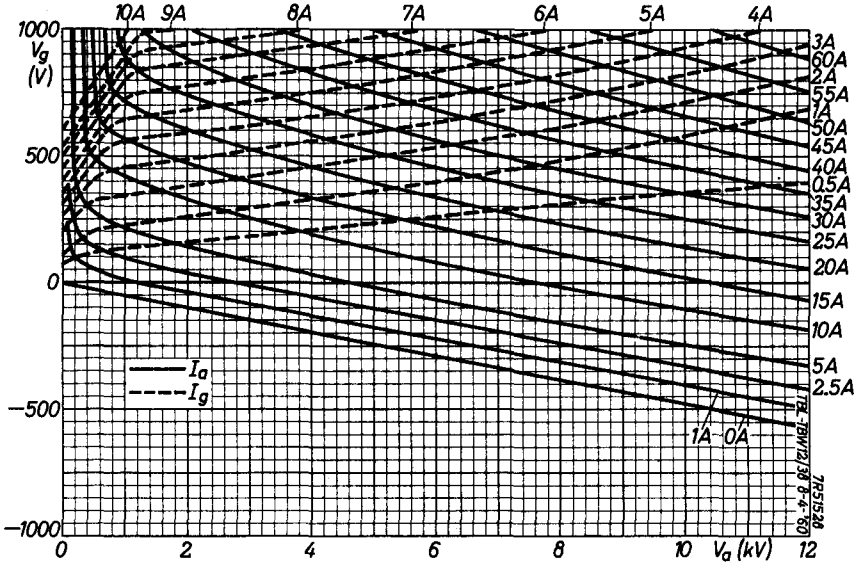
10A
9A
8A
7A
6A
5A
4A
3A
60A
2A
55A
1A
50A
45A
40A
0.5A
35A
30A
25A
20A
15A
10A
5A
2.5A
1A
0A
1000
V_g
(V)
500
0
−500
−1000
I_a
I_g
0
2
4
6
8
10
V_a (kV)
12
TBL-TBW12/38 8-4-'60
7R51528

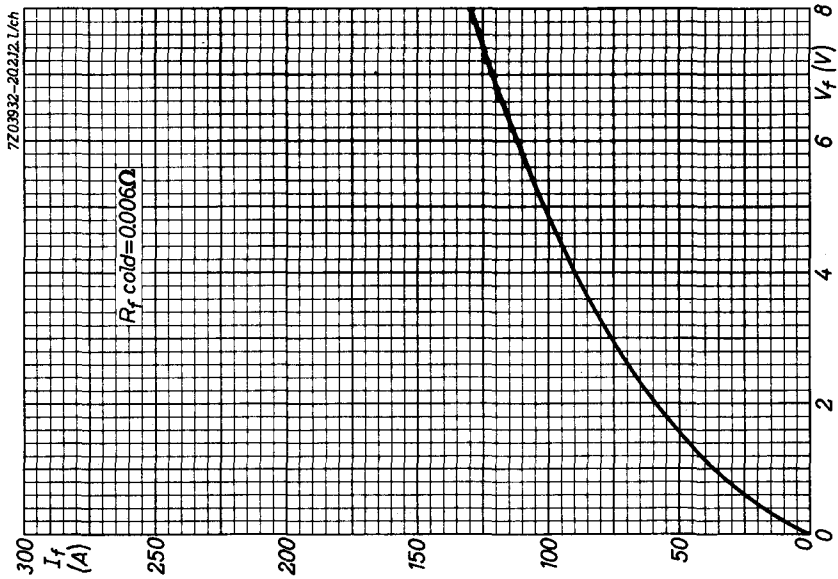
7Z03932-20.2.12.1/ch
R_f cold=0.006Ω
300
I_f
(A)
250
200
150
100
50
0
0
2
4
6
8
V_f (V)