RF POWER TRIODE

QUICK REFERENCE DATA

freq.	class-C telegraphy		grounded grid		oscillator		oscillator, industrial				class-B modulator	
MHz	V_a kV	W_o W	V_a kV	W_o* W	V_a kV	W_o* W	V_a kV	W_o W	V_a kV	W_o W	V_a kV	W_o* W
100	4	1200			4	2320					4	1500
	3	840	3	1936	3	1626					3	1360
	2,5	750	2,5	1747							2,5	1140
	2	585	2	1374								
	1,5	425	1,5	1040								
50							3,5	1100	4	630		
							2,25	685	3	415		

HEATING: direct, parallel supply; thoriated tungsten filament

Filament voltage	V_f	=	5 V
Filament current	I_f	=	14,1 A

The filament is designed to accept temporary fluctuations of +5% and −10%

CAPACITANCES

Anode to all other elements except grid	C_a	=	0,16 pF
Grid to all other elements except anode	C_g	=	6,3 pF
Anode to grid	C_{ag}	=	5,0 pF

TYPICAL CHARACTERISTICS

Anode voltage	V_a	=	3 kV
Anode current	I_a	=	90 mA
Mutual conductance	S	=	5 mA/V
Amplification factor	μ	=	25

* Two tubes.

TEMPERATURE LIMITS

Absolute maximum rating system

Bulb temperature	T_{bulb}	max.	350 °C
Anode seal temperature	T_a	max.	220 °C
Pin temperature	T_{pin}	max.	180 °C

COOLING

In cases where the maximum permissible temperatures are likely to be exceeded, as would normally be the case at frequencies above 30 MHz with full ratings, a low-velocity air flow has to be directed onto the anode seal and the bottom of the envelope. The cooling will be facilitated by the use of a blower and a glass chimney type 40666.

MECHANICAL DATA

Socket	2422 512 01001	Base	Giant 5 p.
Anode connector (clip)	40624	Net mass	190 g
Chimney	40666		

Dimensions in mm

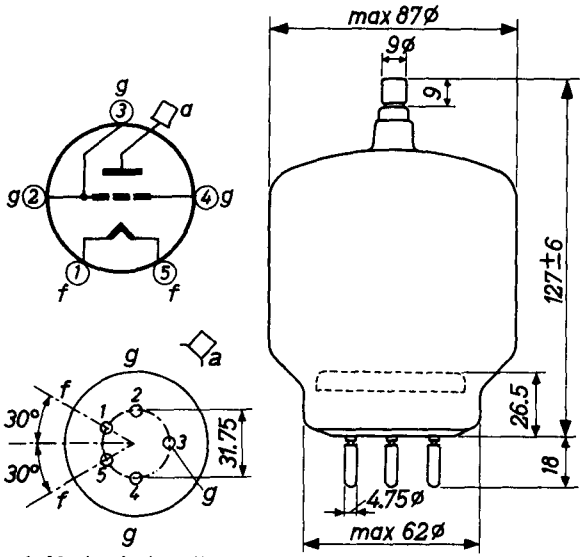

Fig. 1 Mechanical outline.

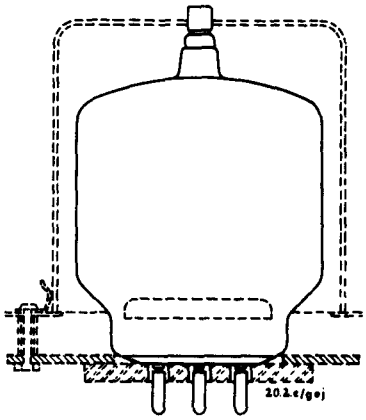

Mounting suggestion of tube with chimney.

Mounting position vertical with base up or down

In order to prevent overheating of the grid pins by high-frequency current it is recommended to include the three grid socket connections in the circuit.

RF CLASS C TELEGRAPHY OR F.M. TELEPHONY

LIMITING VALUES (Absolute limits)

Frequency	f		up to	100	MHz
Anode voltage	V_a	=	max.	4	kV
Anode input power	W_{ia}	=	max.	1550	W
Anode dissipation	W_a	=	max.	350	W
Negative grid voltage	$-V_g$	=	max.	500	V
Grid dissipation	W_g	=	max.	40	W
Grid circuit resistance	R_g	=	max.	100	kΩ
Cathode current	I_k	=	max.	500	mA

OPERATING CONDITIONS

Frequency	f	=	100	100	100	100	100	MHz
Anode voltage	V_a	=	4	3	2.5	2	1.5	kV
Grid voltage	V_g	=	−350	−250	−200	−150	−120	V
Peak grid AC voltage	V_{gp}	=	535	430	380	320	295	V
Anode current	I_a	=	380	363	400	400	400	mA
Grid current	I_g	=	80	69	69	80	80	mA
Driving power	W_{dr}	=	40	27	23.5	23	21.5	W
Anode input power	W_{ia}	=	1520	1090	1000	800	600	W
Anode dissipation	W_a	=	320	250	250	215	175	W
Output power	W_o	=	1200	840	750	585	425	W
Efficiency	η	=	79	77	75	73	71	%

RF CLASS C TELEGRAPHY OR FM TELEPHONY (continued)

OPERATING CONDITIONS, grounded grid, two tubes

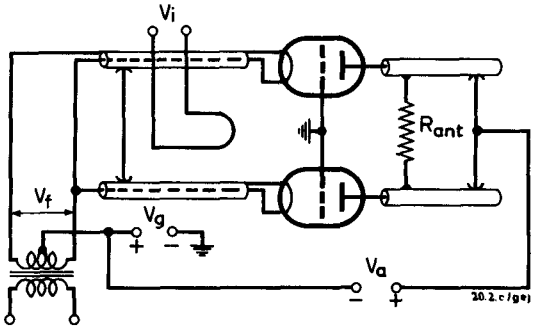

Fig. 2 Ground grid configuration.

Frequency	f	=	100	100	100	100	MHz
Anode voltage	V_a	=	3	2.5	2	1.5	kV
Grid voltage	V_g	=	−250	−200	−150	−120	V
Peak grid AC voltage	V_{gp}	=	430	380	320	295	V
Anode current	I_a	=	726	800	800	800	mA
Grid current	I_g	=	138	138	160	160	mA
Driving power	W_{dr}	=	310	294	250	233	W
Anode input power	W_{ia}	=	2180	2000	1600	1200	W
Anode dissipation	W_a	=	500	500	430	350	W
Output power	W_o	=	1680+256	1500+247	1170+204	850+190	W [1]
Efficiency	η	=	77	75	73	71	%

[1]) Power transferred from driving stage included

RF CLASS C OSCILLATOR

LIMITING VALUES (Absolute limits)

Frequency	f		up to	100	MHz
Anode voltage	V_a	=	max.	4	kV
Anode input power	W_{ia}	=	max.	1550	W
Anode dissipation	W_a	=	max.	350	W
Negative grid voltage	$-V_g$	=	max.	500	V
Grid dissipation	W_g	=	max.	40	W
Grid circuit resistance	R_g	=	max.	100	kΩ
Cathode current	I_k	=	max.	500	mA

OPERATING CONDITIONS, *two tubes*

Frequency	f	=	100	100	MHz
Anode voltage	V_a	=	4	3	kV
Anode current	I_a	=	760	726	mA
Grid current	I_g	=	160	138	mA
Grid resistor	R_g	=	2200	1800	Ω
Driving power	W_{dr}	=	80	54	W
Anode input power	W_{ia}	=	3040	2180	W
Anode dissipation	W_a	=	640	500	W
Output power	W_o	=	2320	1626	W
Efficiency	η	=	77	75	%

R F CLASS C OSCILLATOR FOR INDUSTRIAL USE with anode voltage from **single-phase full-wave rectifier without filter**

LIMITING VALUES (Absolute limits)

Frequency	f		up to 50	up to 100	up to 150	MHz
Anode voltage	V_a	=	max. 3.8	max. 2.7	max. 1.8	kV
Anode input power	W_{ia}	=	max. 1500	max. 975	max. 650	W
Anode dissipation	W_a	=	max. 350	max. 350	max. 350	W
Negative grid voltage	$-V_g$	=	max. 500	max. 500	max. 500	V
Grid dissipation	W_g	=	max. 40	max. 40	max. 40	W
Grid circuit resistance	R_g	=	max. 100	max. 100	max. 100	kΩ
Cathode current	I_k	=	max. 450	max. 450	max. 450	mA

OPERATING CONDITIONS

Frequency	f	=	50	50	MHz
Anode voltage	V_a	=	3.5	2.25	kV
Anode current	I_a	=	325	340	mA
Grid current	I_g	=	65	60	mA
Grid resistor	R_g	=	4500	3330	Ω
Anode input power	W_{ia}	=	1400	935	W
Anode dissipation	W_a	=	300	250	W
Output power	W_o	=	1100	685	W
Efficiency	η	=	78	73	%
Output power in the load	W_ℓ	=	900	560	W

RF CLASS C OSCILLATOR FOR INDUSTRIAL USE with self rectification, 180° phase shift **between** V_a and V_g

LIMITING VALUES (Absolute limits)

Frequency	f		up to 50	up to 100	up to 150	MHz
Transformer voltage	V_{tr}	=	max. 4.5	max. 3.5	max. 2.25	kV_{RMS}
Anode input power	W_{ia}	=	max. 900	max. 730	max. 500	W
Anode dissipation	W_a	=	max. 350	max. 350	max. 350	W
Negative grid voltage	$-V_g$	=	max. 500	max. 500	max. 500	V
Grid dissipation	W_g	=	max. 40	max. 40	max. 40	W
Grid circuit resistance	R_g	=	max. 100	max. 100	max. 100	kΩ
Cathode current	I_k	=	max. 285	max. 285	max. 285	mA

OPERATING CONDITIONS

Frequency	f	=	50	50	MHz
Transformer voltage	V_{tr}	=	4	3	kV_{RMS}
Anode current	I_a	=	190	180	mA
Driving voltage	V_g	=	280	110	V_{RMS}
Grid current	I_g	=	35	32	mA
Grid resistor	R_g	=	5500	3000	Ω
Anode input power	W_{ia}	=	840	600	W
Anode dissipation	W_a	=	210	185	W
Output power	W_o	=	630	415	W
Efficiency	η	=	75	69	%
Output power in the load	W_ℓ	=	515	350	W

AF CLASS B AMPLIFIER AND MODULATOR, two tubes in push-pull

LIMITING VALUES (Absolute limits)

Anode voltage	V_a	=	max.	4	kV
Anode input power	W_{ia}	=	max.	1550	W
Anode dissipation	W_a	=	max.	350	W
Negative grid voltage	$-V_g$	=	max.	500	V
Grid dissipation	W_g	=	max.	40	W
Grid circuit resistance	R_g	=	max.	100	kΩ
Cathode current	I_k	=	max.	500	mA

OPERATING CONDITIONS

V_a	=	4		3		2.5		kV
V_g	=	-135		-102		-77.5		V[1])
$R_{aa\sim}$	=	20		14.5		12		kΩ
V_{gg_p}	=	0	485	0	475	0	400	V
I_a	=	2x88	2x270	2x60	2x290	2x90	2x300	mA
I_g	=	0	2x30	0	2x60	0	2x55	mA
W_{dr}	=	0	2x7	0	2x13	0	2x10	W
W_{ia}	=	2x350	2x1080	2x180	2x870	2x225	2x750	W
W_a	=	2x350	2x305	2x180	2x190	2x225	2x180	W
W_o	=	0	1550	0	1360	0	1140	W
d_{tot}	=	-	< 2.5	-	< 2.5	-	< 2.5	%
η	=	-	71.7	-	78.1	-	76	%

[1]) To be adjusted for zero signal anode current

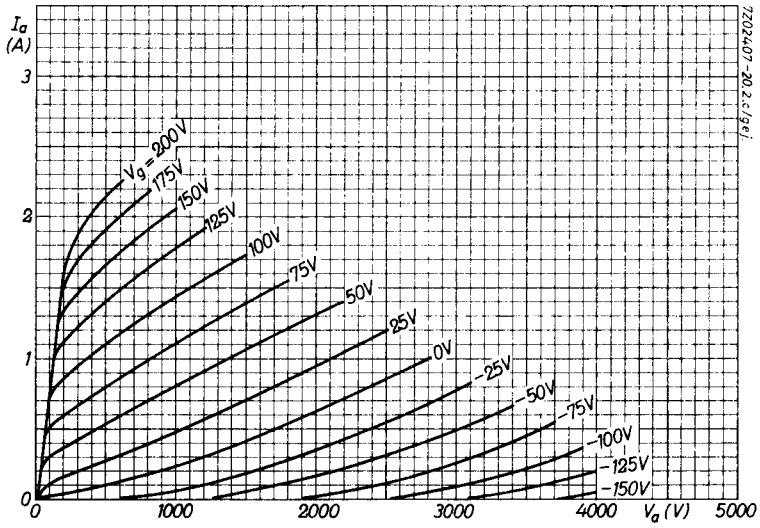

Fig. 3 I_a/V_a characteristics.

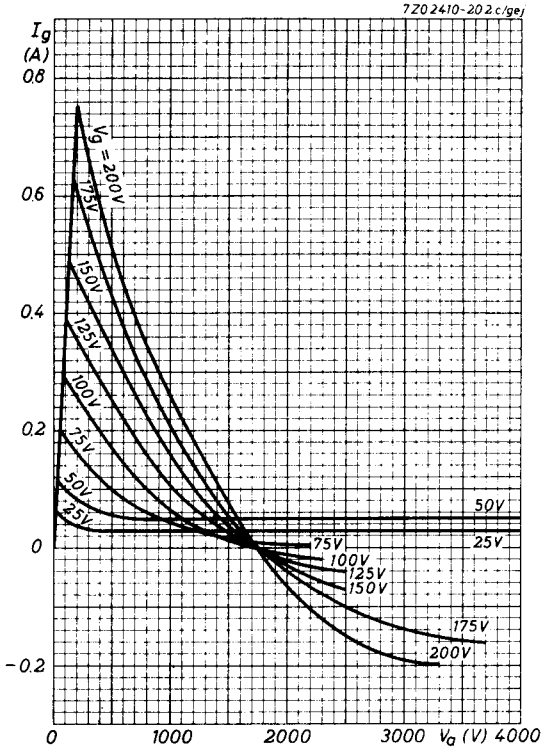

Fig. 4 I_g/V_a characteristics.

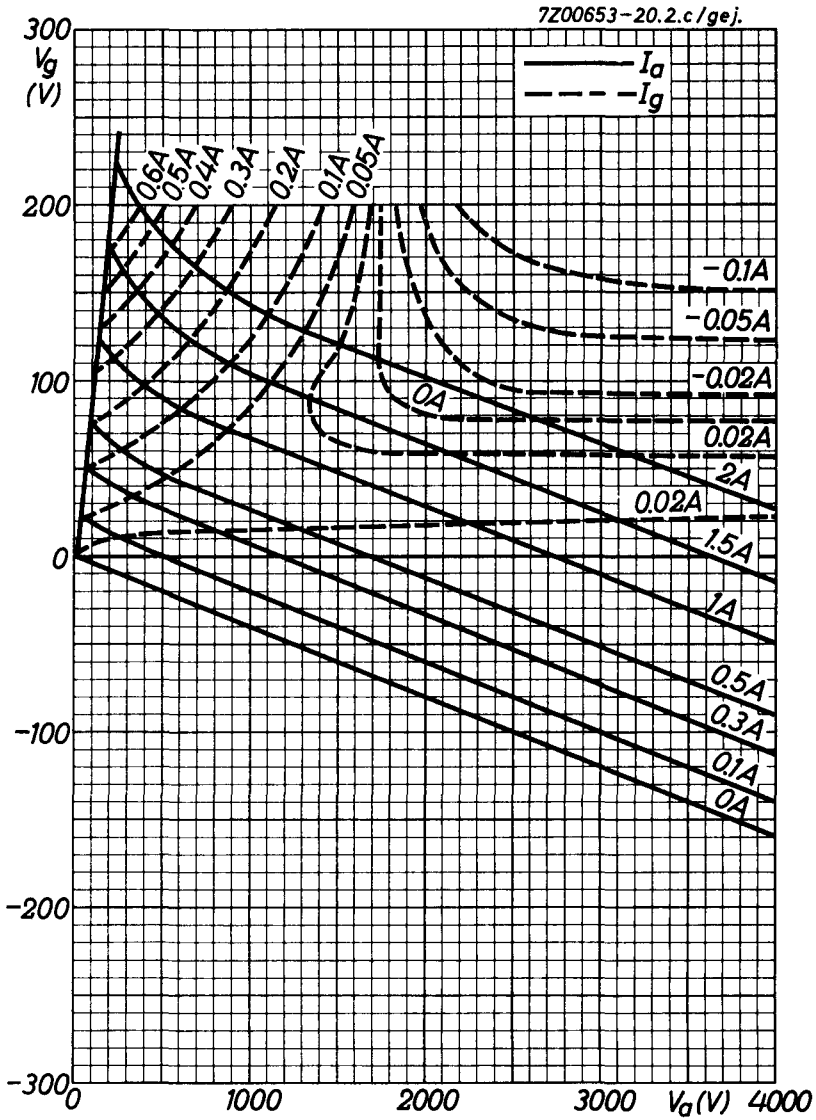

Fig. 5 Constant current characteristics.

PHILIPS

Data handbook

Electronic components and materials

TB3/750

page	sheet	date
1	49	1988.02
2	50	1988.02
3	51	1988.02
4	52	1988.02
5	53	1988.02
6	54	1988.02
7	55	1988.02
8	56	1988.02
9	57	1988.02
10	58	1988.02
11	FP	2000..09.14