RF POWER TRIODE

QUICK REFERENCE DATA									
λ (m)	Freq. (MHz)	C telegr.		C osc.		B teleph.		C_a mod.	
		V_a (V)	W_o (W)	V_a (V)	W_o (W)	V_a (V)	W_o (W)	V_a (V)	W_o (W)
4	75	2500	390			2500	65	2000	204
		2000	295			2000	64	1500	153
		1500	210			1500	59	1000	95
		1000	126						
2	150			2500	376				
				2000	282				
1.5	200			2000	198				

HEATING: direct; filament thoriated tungsten

Filament voltage	V_f	=	6.3	V
Filament current	I_f	=	5.4	A

CAPACITANCES

Anode to all other elements except grid	C_a	=	0.1	pF
Grid to all other elements except anode	C_g	=	4.3	pF
Anode to grid	C_{ag}	=	5.2	pF

TYPICAL CHARACTERISTICS

Amplification factor	μ	=	25	
Mutual conductance	S (I_a = 44 mA)	=	2.8	mA/V

COOLING: radiation/low-velocity air flow

It is necessary to direct a low-velocity air flow to the bottom and the top seal if the tube is used at or near the limiting values at frequencies above 50 MHz .

LIMITING VALUES

Absolute maximum rating system

Anode voltage	V_a	max.	2500	V
Anode dissipation*	W_a	max.	135	W
Grid dissipation	W_g	max.	16	W
Grid circuit resistance with fixed grid bias	R_g	max.	0,1	MΩ
Grid circuit resistance with automatic grid bias	R_g	max.	0,2	MΩ
Cathode current	I_k	max.	250	mA
Peak cathode current	I_{kp}	max.	1,6	A
Temperature of anode seal		max.	220	°C
Bottom temperature		max.	180	°C

MECHANICAL DATA

Base	giant 5 p
Anode connector	40624
Socket	2422 512 01001
Socket with grounded grid connections	40215/01
Net mass	110 g

Dimensions in mm

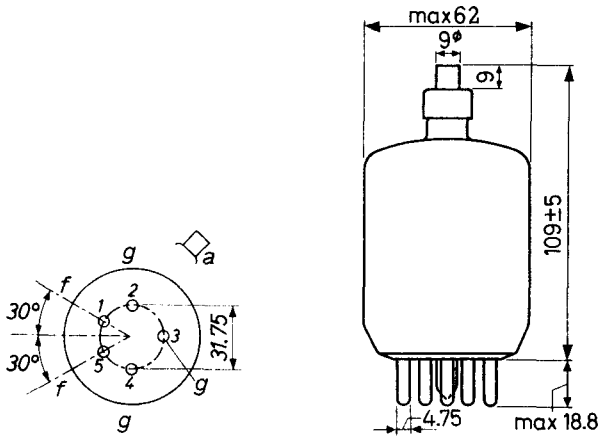

Mounting position vertical with base up or down

Fig. 1 Mechanical outline.

* Anode red hot, temperature = 850 °C.

OPERATING CONDITIONS RF CLASS C TELEGRAPHY

Wavelength	λ	=	4	4	4	4	m
Anode voltage	V_a	=	2500	2000	1500	1000	V
Grid voltage	V_g	=	-200	-150	-110	-80	V
Anode current	I_a	=	205	205	205	205	mA
Grid current	I_g	=	40	40	40	40	mA
Peak grid AC voltage	V_{gp}	=	390	340	300	260	V
Grid input power	W_{ig}	=	14	13	11	10	W
Anode input power	W_{ia}	=	512	410	308	205	W
Anode dissipation	W_a	=	122	115	98	79	W
Output power	W_o	=	390	295	210	126	W
Efficiency	η	=	76	72	68	61.5	%

OPERATING CONDITIONS RF CLASS B TELEPHONY

Wavelength	λ	=	4	4	4	m
Anode voltage	V_a	=	2500	2000	1500	V
Grid voltage	V_g	=	-87	-67	-45	V
Anode current	I_a	=	77	97	120	mA
Peak grid AC voltage	V_{gp}	=	100	100	100	V
Anode input power	W_{ia}	=	193	194	180	W
Anode dissipation	W_a	=	128	130	121	W
Output power	W_o	=	65	64	59	W
Efficiency	η	=	34	33	33	%
Modulation depth	m	=	100	100	100	%
Grid current	I_g	=	20	28	52	mA
Grid input power	W_{ig}	=	3.6	5.1	9.4	W

OPERATING CONDITIONS RF CLASS C ANODE MODULATION; two tubes

Wavelength	λ	=	4	4	4	m
Anode voltage	V_a	=	2000	1500	1000	V
Grid voltage	V_g	=	−225	−180	−130	V
Anode current	I_a	=	255	255	255	mA
Grid current	I_g	=	80	80	80	mA
Peak grid AC voltage	V_{gp}	=	415	370	320	V
Grid input power	W_{ig}	=	30	27	23	W
Anode input power	W_{ia}	=	510	382	255	W
Anode dissipation	W_a	=	102	76	65	W
Output power	W_o	=	408	306	190	W
Efficiency	η	=	80	80	74.5	%
Modulation depth	m	=	100	100	100	%
Modulation power	W_{mod}	=	255	191	126	W

OPERATING CONDITIONS AS RF CLASS C OSCILLATOR; two tubes

Wavelength	λ	=	2	2	1.5	m
Anode voltage	V_a	=	2500	2000	2000	V
Anode current	I_a	=	410	410	346	mA
Grid current	I_g	=	80	80	80	mA
Grid resistor	R_g	=	2500	1875	1875	Ω
Anode input power	W_{ia}	=	1025	820	692	W
Anode dissipation	W_a	=	245	230	270	W
Grid input power	W_{ig}	=	28	26	26	W
Output power	W_o	=	752	564	396	W
Efficiency	η	=	73	69	57	%

OPERATING CONDITIONS AS RF CLASS C OSCILLATOR for high frequency heating and diathermy generators

A. With anode voltage from single-phase full-wave rectifier without filter

Wavelength	λ	=	7.3	m
Anode voltage	V_a	=	2000	V [1]
Anode current	I_a	=	170	mA
Grid current	I_g	=	34	mA
Grid resistor	R_g	=	3750	Ω
Anode input power	W_{ia}	=	420	W
Anode dissipation	W_a	=	120	W
Grid input power	W_{ig}	=	10	W
Output power	W_o	=	290	W
Efficiency	η	=	69	%

B. With anode and grid alternating voltage. Phase-shift of 180° between V_a and V_g

Wavelength	λ	=	7.3	m
Anode voltage	V_a	=	2500	V_{RMS}
Anode current	I_a	=	90	mA
Grid current	I_g	=	20	mA
Grid resistor	R_g	=	1700	Ω
Grid voltage	V_g	=	85	V_{RMS}
Anode input power	W_{ia}	=	255	W
Anode dissipation	W_a	=	85	W
Output power	W_o	=	170	W
Efficiency	η	=	67	%

[1]) Mean value

OPERATING CONDITIONS RF CLASS C TELEGRAPHY

grounded grid, two tubes

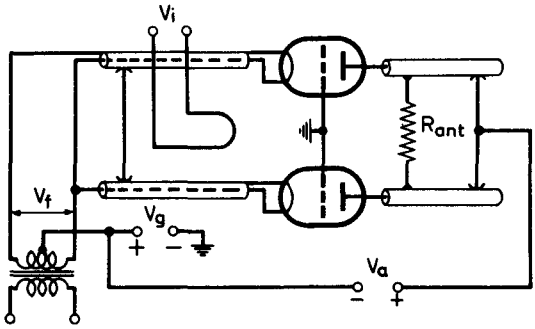

Fig. 2 Grounded-grid configuration.

Wavelength	λ	=	3	3	3	3	m
Anode voltage	V_a	=	2500	2000	1500	1000	V
Grid voltage	V_g	=	−200	−150	−110	−80	V
Anode current	I_a	=	410	410	410	410	mA
Grid current	I_g	=	80	80	80	80	mA
Peak grid AC voltage	V_{gp}	=	390	340	300	260	V
Grid input power	W_{ig}	=	158	136	118	100	W
Anode input power	W_{ia}	=	1025	820	615	410	W
Anode dissipation	W_a	=	245	230	195	158	W
Output power	W_o	=	780+130	590+110	420+96	252+80	W[1])
Efficiency	η	=	76	72	68	61.5	%[2])

1) Power transferred from driving stage included

2) Pure tube efficiency

AF CLASS B AMPLIFIER AND MODULATOR

LIMITING VALUES (Absolute limits)

Anode voltage	V_a	=	max.	2500	V
Anode dissipation	W_a	=	max.	135	W
Grid dissipation	W_g	=	max.	16	W
Cathode current	I_k	=	max.	250	mA
Peak cathode current	I_{kp}	=	max.	1.6	A

OPERATING CONDITIONS, two tubes

Anode voltage	V_a	=	2500		2000		V
Grid voltage	V_g	=	-86		-65		V
Load resistance	$R_{aa\sim}$	=	18.2		12.0		kΩ
Peak grid to grid voltage	V_{ggp}	=	0	412	0	394	V
Anode current	I_a	=	2x30	2x178	2x30	2x208	mA
Grid current	I_g	=	0	2x42	0	2x42	mA
Grid input power	W_{ig}	=	0	2x7.8	0	2x7.3	W
Anode input power	W_{ia}	=	2x75	2x445	2x60	2x416	W
Anode dissipation	W_a	=	2x75	2x95	2x60	2x101	W
Output power	W_o	=	0	700	0	630	W
Total harmonic distortion	d_{tot}	=	-	5.0	-	3.7	%
Efficiency	η	=	-	78.5	-	76	%

Anode voltage	V_a	=	1500		1000		V
Grid voltage	V_g	=	-46		-23		V
Load resistance	$R_{aa\sim}$	=	8.5		5.0		kΩ
Peak grid to grid voltage	V_{ggp}	=	0	340	0	295	V
Anode current	I_a	=	2x30	2x210	2x30	2x210	mA
Grid current	I_g	=	0	2x40	0	2x40	mA
Grid input power	W_{ig}	=	0	2x6.1	0	2x5.4	W
Anode input power	W_{ia}	=	2x45	2x315	2x30	2x210	W
Anode dissipation	W_a	=	2x45	2x90	2x30	2x73	W
Output power	W_o	=	0	450	0	274	W
Total harmonic distortion	d_{tot}	=	-	2.9	-	2.2	%
Efficiency	η	=	-	71.5	-	65	%

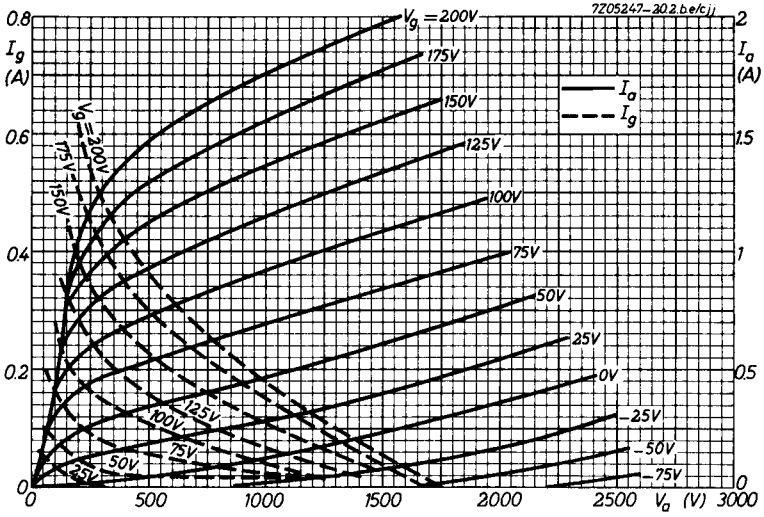

Fig. 3
I_a/I_g characteristics.

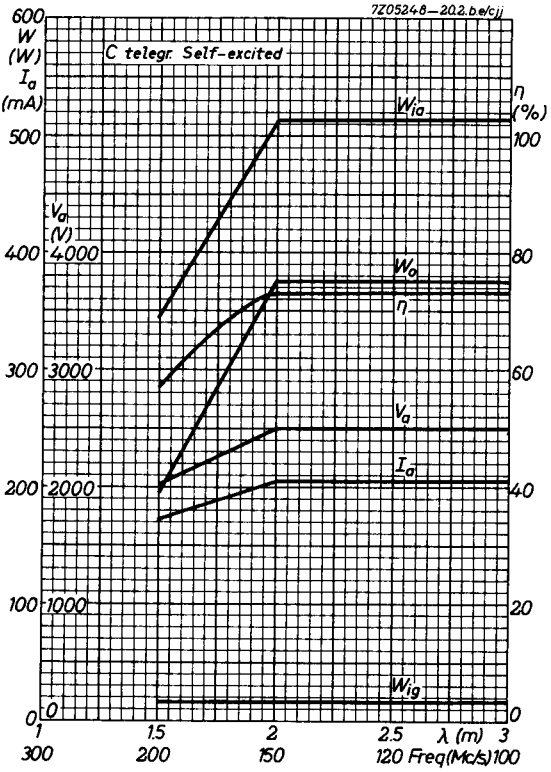

Fig. 4
Characteristics at frequencies above 150 MHz.

PHILIPS

Data handbook

Electronic components and materials

TB2.5/300

page	sheet	date
1	29	1988.02
2	30	1988.02
3	31	1988.02
4	32	1988.02
5	33	1988.02
6	34	1988.02
7	35	1988.02
8	36	1988.02
9	FP	2000.09.14