INTRODUCTION

The T957Y and T957Z are 12-inch diameter Cathode Ray Tubes with electrostatic focus and magnetic deflection, designed for radar applications. They have spot sizes at least 40% smaller than those of T939Y and T939Z at the same beam currents, and are direct replacements for these types.

The fluorescent colour of the aluminised screen is orange with an orange afterglow; T957Y has an afterglow of long persistence and that of the T957Z is very long. See Note 1 for other screens.

The tubes give a display of adequate brightness from the short modulation pulses encountered in short range radars.

GENERAL DATA

Electrical and General

Cathode	Indirectly Heated, Oxide Coated	
Heater Voltage (*See Note* 2)	6·3	V
Heater Current	0·3	A
Screen (*See Notes* 1 *and* 3):	Aluminised	
Fluorescent Colour	Orange	
Afterglow Colour	Orange	
Afterglow Persistence:		
T957Y	Long	
T957Z	Very Long	
Deflection Method	Magnetic	
Deflection Angle	50	Degrees
Focusing Method	Low Voltage Electrostatic	
Inter-electrode Capacitances:		
Grid to all other electrodes	8·0	pF Max
Cathode to all other electrodes	8·0	pF Max
Anode 2 + anode 4 to external conductive coating	1200	pF Approx

Mechanical

Overall Length	19·450 inches	(494 mm)	Max
Overall Diameter	12·087 inches	(307 mm)	Max
Neck Diameter	1·398 inches	(35·5 mm)	Max
Net Weight	12 pounds	(5·5 kg)	Approx
Base	B.S.448/B12A		
Anode 2 and Anode 4 Connection	B.S.448/CT8 Cavity Cap		
Mounting Position	Any, except vertical with the screen downwards and the axis of the tube making an angle of less than 20° with the vertical.		

MINIMUM AND MAXIMUM RATINGS

(Absolute Values. *See Note* 4)

	Min	*Max*	
Anode 2 and Anode 4 Voltage	8·0	18	kV
Anode 3 Voltage:			
Positive value	—	500	V
Negative value	—	500	V
Anode 1 Voltage	200	500	V
Grid Voltage (negative value)	1·0	200	V
Grid to Cathode Impedance (at 50c/s).. ..	—	0·5	MΩ
Grid to Cathode Resistance	—	1·5	MΩ
Heater to Cathode Voltage:			
Heater positive with respect to cathode ..	—	150	V
Heater negative with respect to cathode ..	—	150	V
Heater to Cathode Resistance		*See Note* 5	

TYPICAL OPERATING CONDITIONS

Anode 2 and Anode 4 Voltage	12	kV
Anode 3 Voltage (*See Note* 6)	−200 to +200	V
Anode 1 Voltage	300	V
Anode 3 Current	−15 to +15	μA
Grid Voltage for cut-off	−30 to −70	V

NOTES

1. The T957 is supplied with either an E.E.V. Y Screen with long persistence (T957Y) or an E.E.V. Z Screen with very long persistence (T957Z); the screens satisfy the requirements of E.V.S.008 and 009 Screen Specifications respectively. It can also be manufactured with other screens, and customers' enquiries are invited.

2. The heater is suitable for either series or parallel operation.

3. The fluoride screen is sensitive to burn and should not be operated with slow moving spots.

4. All voltages are with respect to the cathode.

5. When the heater is in a series chain or earthed, the impedance between the cathode and earth at 50c/s must not exceed 100kΩ. When the heater is supplied from a separate transformer, the heater to cathode resistance must not exceed 1·0MΩ.

6. An acceptable focus quality is obtained with an anode 3 voltage range of −200 to +200V. If it is required to pass through the point of focus a voltage range of at least −300 to +300V will be required.

X-RAY WARNING

X-rays are produced when types T957Y and T957Z are operated with anode voltages above 16kV (absolute value). These rays can constitute a health hazard unless the tube is adequately shielded for X-ray radiation. This is entirely a function of high voltage devices and does not reflect on the design of the tube.

ENGLISH ELECTRIC

GRID VOLTAGE CHARACTERISTICS

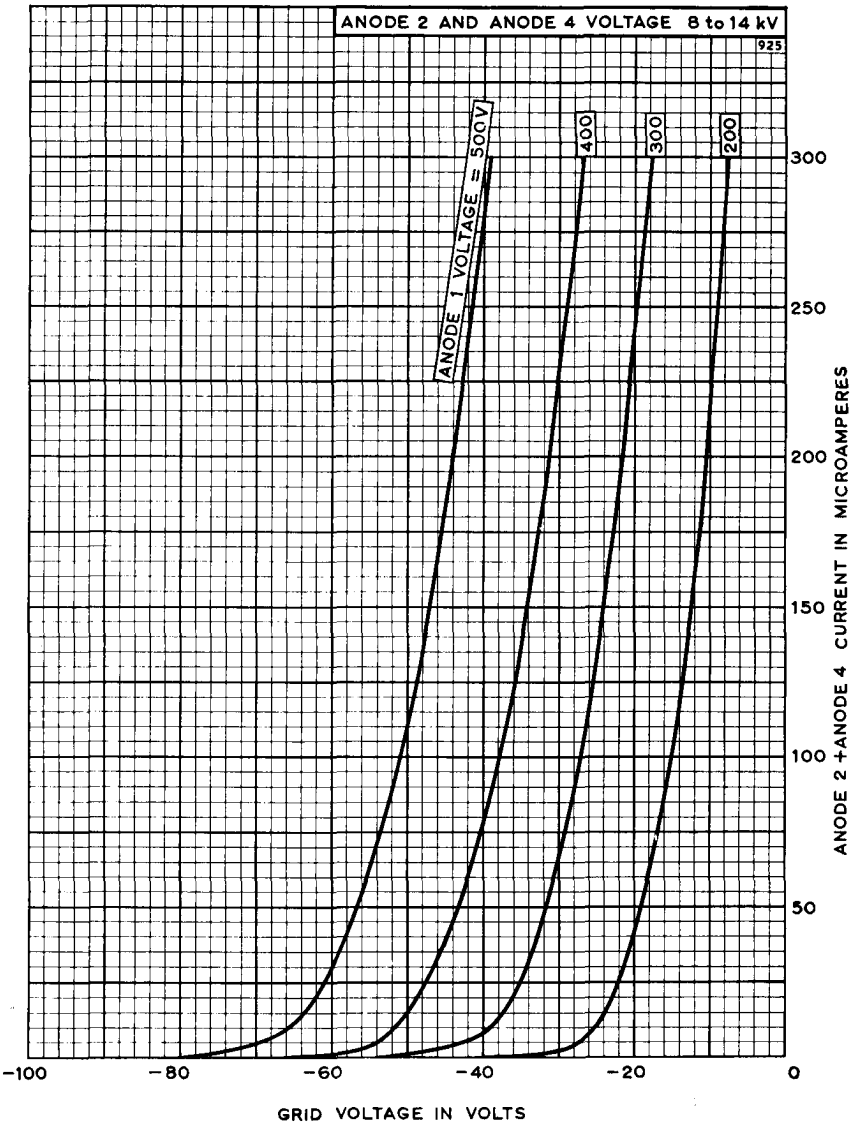

ENGLISH ELECTRIC

GRID CUT-OFF VOLTAGE LIMITS

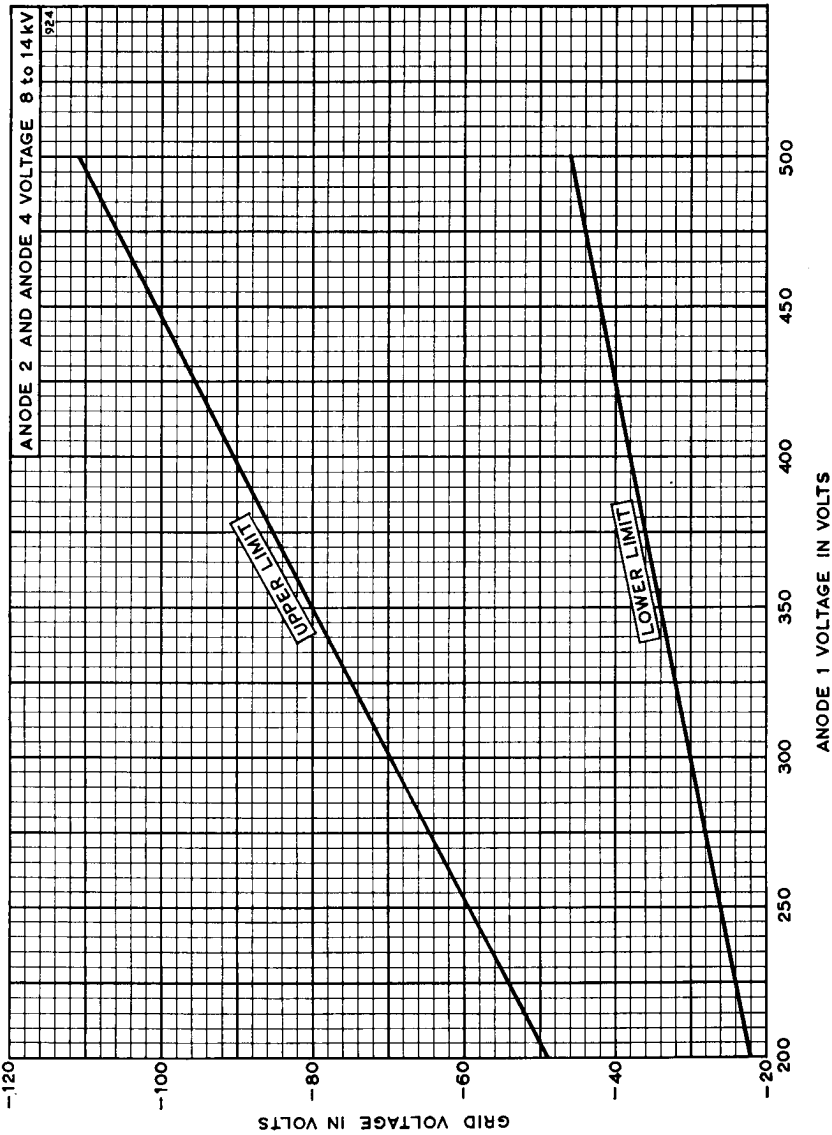

ENGLISH ELECTRIC

OUTLINE

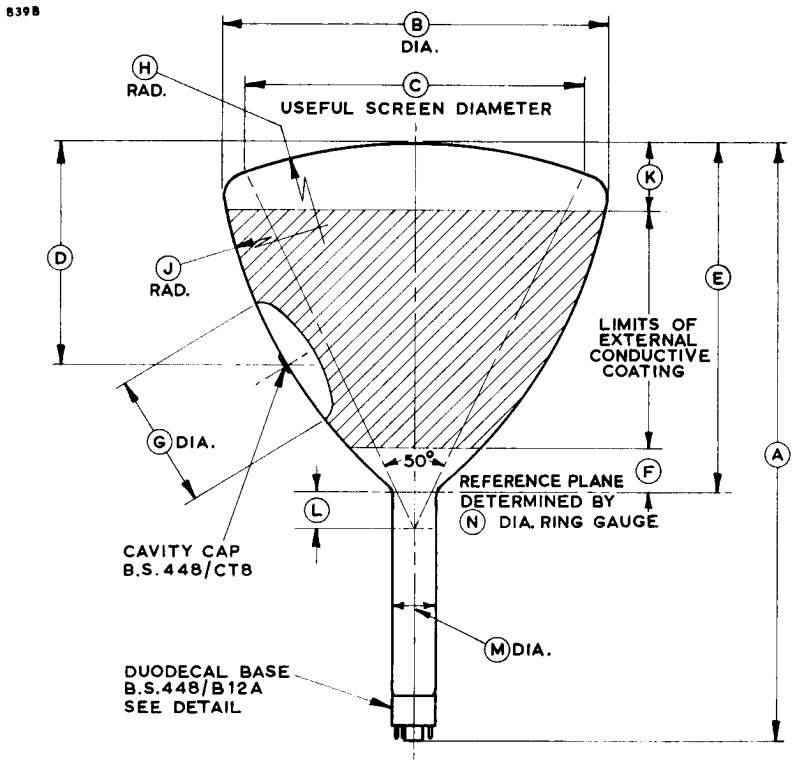

Ref.	Inches	Millimetres	Ref.	Inches	Millimetres
A	$19{\cdot}134^{+0{\cdot}315}_{-0{\cdot}275}$	$486{\cdot}0^{+8{\cdot}0}_{-7{\cdot}0}$	G	$4{\cdot}331 \pm 0{\cdot}394$	$110{\cdot}0 \pm 10{\cdot}0$
B	$12{\cdot}008^{+0{\cdot}079}_{-0{\cdot}098}$	$305{\cdot}0^{+2{\cdot}0}_{-2{\cdot}5}$	H	39·370	1000·0
C	10·433	265·0	J	16·772	426·0
D	$7{\cdot}087 \pm 0{\cdot}197$	$180{\cdot}0 \pm 5{\cdot}0$	K	1·968	50·0
E	$10{\cdot}709 \pm 0{\cdot}138$	$272{\cdot}0 \pm 3{\cdot}5$	L	1·260	32·0
F	1·417	36·0	M	1·339 to 1·398	34·0 to 35·5
			N	1·417	36·0

Inch dimensions have been derived from millimetres.

OUTLINE DETAILS

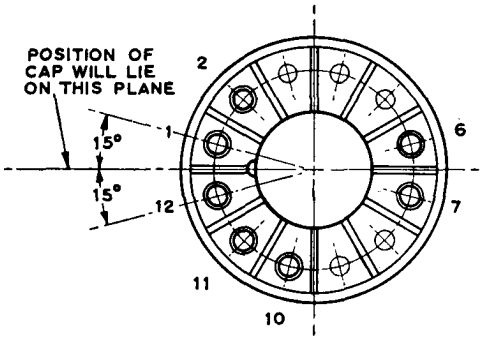

840

PIN	ELEMENT
1	HEATER
2	GRID
3	OMITTED
4	OMITTED
5	OMITTED
6	ANODE 3
7	INTERNAL CONNECTION
8	OMITTED
9	OMITTED
10	ANODE 1
11	CATHODE
12	HEATER
CAP	ANODE 2 & ANODE 4