DESCRIPTION

The Sylvania SC-3061 is a 3 gun, electrostatically focused and deflected cathode-ray tube, 10 inches in diameter, for displaying simultaneously, 3 independently controlled traces. It features monoaccelerator design for maximum pattern linearity and deflection factor uniformity. All deflection plate leads are brought through the neck. In addition to high vertical deflection sensitivity, an independent astigmatism electrode connection is provided, also brought through the neck, so that maximum resolution can be attained by the use of dynamic control of both focus and astigmatism voltages.

CHARACTERISTICS

GENERAL DATA[1]

Focusing Method . . . . . Electrostatic
Deflection Method . . . . . Electrostatic

Types*	SC-3061 P1	SC-3061 P2	SC-3061 P7	SC-3061 P11
Fluorescence	Green	Blue-Green	Blue	Blue
Phosphorescence	—	Green	Yellow	—
Persistence	Medium	Long	Long	Short

*In addition to the types shown, the SC-3061P- can be supplied with several other screen phosphors.

ELECTRICAL DATA

Heater Voltage	6.3 Volts
Heater Current (3 Guns in Parallel)	1.50 to 1.98 Amperes
Direct Interelectrode Capacitances (Approx.)	Each Gun
Cathode to All	5.5 μμf
Grid No. 1 to All*	6.5 μμf
D1 to D2	2.5 μμf
D3 to D4	1.5 μμf
D1 to All Other Electrodes	7.5 μμf
D2 to All Other Electrodes	7.5 μμf
D3 to All Other Electrodes	4.5 μμf
D4 to All Other Electrodes	4.5 μμf
*Value for B Gun Only:	10 μμf

MECHANICAL DATA

Overall Length	20½ ± ½ Inches
Minimum Useful Screen Diameter	9 Inches
Bulb Contact (Recessed Small Ball Cap)	J1-22
Basing	See Diagram, Page 4
Base and Contact Alignment	See Diagram, Page 4
Positive Voltage on D1 (Gun B) Deflects the Beam Toward Base Key	±10 Degrees
Positive Voltage on D3 Deflects the Beam Approximately Toward Pin No. 11	
Bulb Contact (J1-22), is Oriented 45° ± 10° from D1-D2 Trace (Gun B) and is Aligned Approximately with Base Pin Position No. 6	
For Deflection Plate Lead Alignment with the Base and Bulb Contact—See Diagram	
Trace Alignment	
D1-D2 Trace Aligns with D3-D4 Trace (Each Gun)	90 ± 1 Degree
D1-D2 Traces of the 3 Guns are Parallel	±1 Degree

QUICK REFERENCE DATA

Three Independent Guns
10" Direct Viewed
Oscilloscope Tube
Round Glass Type
Electrostatic Focus
Electrostatic Deflection
Monoaccelerator Design
All Deflection Plate Leads
Brought Through the Neck Wall

For Basing
See Page 4

SYLVANIA
ELECTRONIC TUBES
A Division of
Sylvania Electric Products Inc.
PICTURE TUBE OPERATIONS
SENECA FALLS, NEW YORK
Prepared and Released By The
TECHNICAL PUBLICATIONS SECTION
EMPORIUM, PENNSYLVANIA
OCTOBER, 1961

File Under
SPECIAL AND GENERAL PURPOSE
CATHODE RAY TUBES

MAXIMUM RATINGS (Absolute Maximum Values)

Anode Voltage	5500 Volts	dc
Focus Electrode Voltage	3000 Volts	dc
Grid No. 1 Voltage		
Negative Bias Value	220 Volts	dc
Positive Bias Value	0 Volts	dc
Positive Peak Value	2 Volts	dc
Peak Heater to Cathode Voltage		
Heater Negative with Respect to Cathode	200 Volts	
Heater Positive with Respect to Cathode	200 Volts	
Peak Voltage Between Anode and Astigmatism Electrode, or Any Deflecting Plate	750 Volts	

TYPICAL OPERATING CONDITIONS

Anode Voltage	5000 Volts	dc
Astigmatism Electrode Voltage	5000 Volts	dc
Focus Electrode Voltage	1500—2500 Volts	dc
Grid No. 1 Voltage[2]	−100 to −175 Volts	dc
Line Width "A"[3]	.016 Inches	Max.
Deflection Factors		
D1-D2	120 to 140 Volts Per Inch	
D3-D4	62 to 76 Volts Per Inch	
Deflection Factor Uniformity [4]	1½ Percent	Max.
Undeflected Spot Positions[5]	Within 1 Inch Square	
Useful Scan[6]		
D1-D2	±4⅛ Inches	
D3-D4	±1½ Inches	
Interaction Factor[7]	6×10^{-5} In./Volts	Max.
Pattern Distortion[8]		

CIRCUIT VALUES

Grid No. 1 Circuit Resistance	1.5 Megohm	Max.
Deflection Circuit Resistance	1.0 Megohm	Max.

NOTES:

1. *Values are for each gun unless otherwise specified.*
2. *Visual extinction of undeflected focused spot.*
3. *Per MIL-E-1 and at a control grid voltage of 25 volts above spot cutoff.*
4. *The deflection factor (for both D1-D2 and D3-D4 plate pairs separately) for a deflection of 75% of the minimum useful scan will not differ from the deflection factor at 25% of the minimum useful scan by more than the indicated value.*
5. *(See Diagram) With the tube shielded, D3-D4 traces vertical, and base Pin No. 11 at top, the three spot positions shall be within three 1 inch squares, each square centered along the vertical centerline of the tube face. The middle square (Gun B) centered on the tube face center, the top square (Gun A) centered 1⅜ inches above the tube face center, and the bottom square (Gun C) centered 1⅜ inches below the tube face center. The slides of the 3 square shall be parallel to the deflection axes.*
6. *Useful scan shall be measured from the center of the square as specified in Note 5 for spot centering.*
7. *The deflection of one beam when balanced dc voltages are applied to the deflection electrodes of either of the other two guns shall be less than the specified value.*
8. *The total horizontal movement of the left or right end of an 8" horizontal trace, produced by any of the three guns, when deflected vertically ¾ inches above or below its normal position, shall not exceed .060 inches.*

   The total vertical movement of the upper or lower end of a 1½ inch vertical trace produced by any of the three guns, when any one or all beams are deflected horizontally for the full 8 inches of sweep, shall be less than .075 inches.

OUTLINE

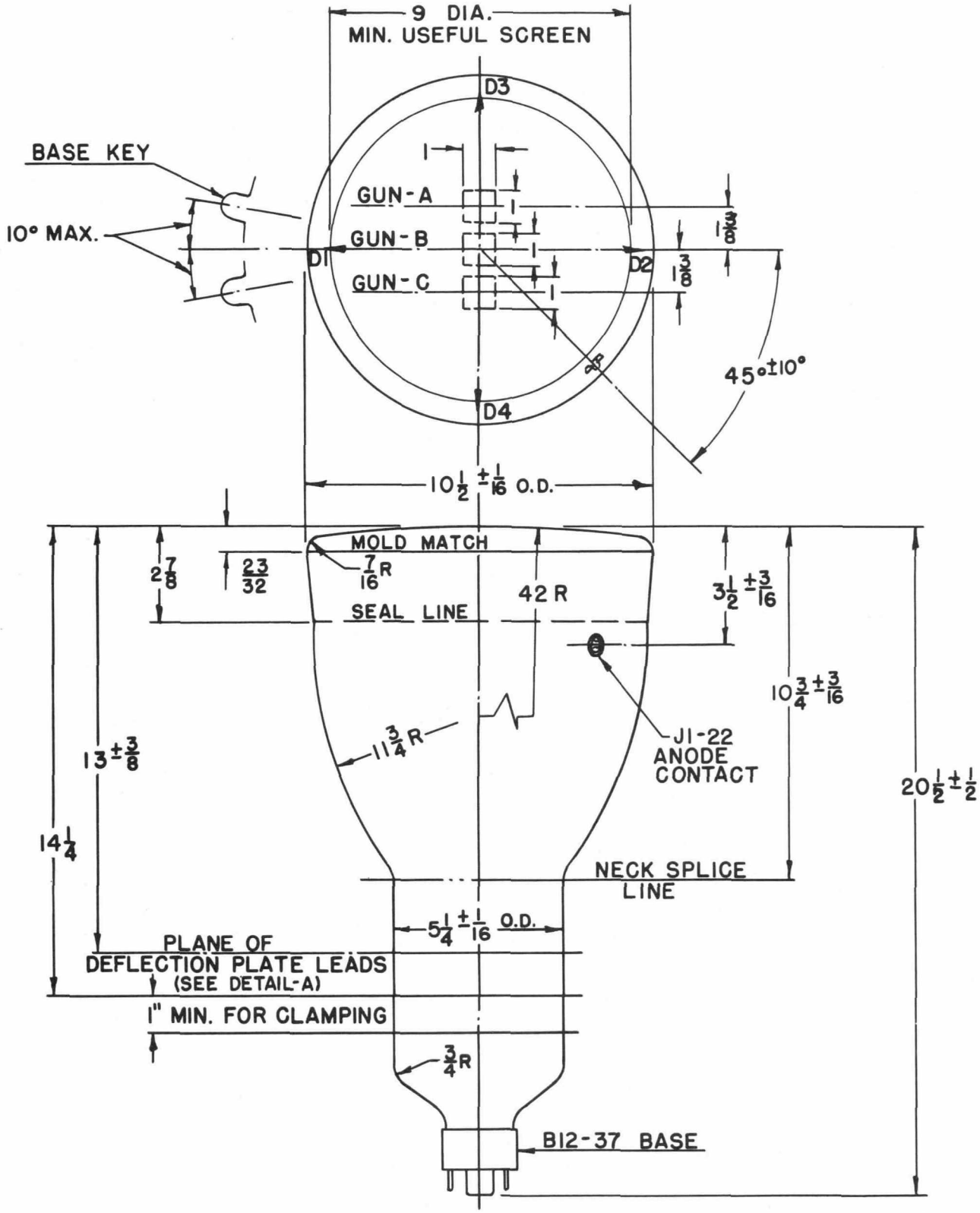
9 DIA.
MIN. USEFUL SCREEN
D3
BASE KEY
10° MAX.
GUN-A
GUN-B
GUN-C
D1
D2
D4
1 3/8
1 3/8
45°±10°
10 1/2 ±1/16 O.D.
MOLD MATCH
7/16 R
2 7/8
23/32
42 R
3 1/2 ±3/16
SEAL LINE
10 3/4 ±3/16
11 3/4 R
J1-22
ANODE
CONTACT
13 ±3/8
20 1/2 ±1/2
14 1/4
NECK SPLICE
LINE
5 1/4 ±1/16 O.D.
PLANE OF
DEFLECTION PLATE LEADS
(SEE DETAIL-A)
1" MIN. FOR CLAMPING
3/4 R
B12-37 BASE

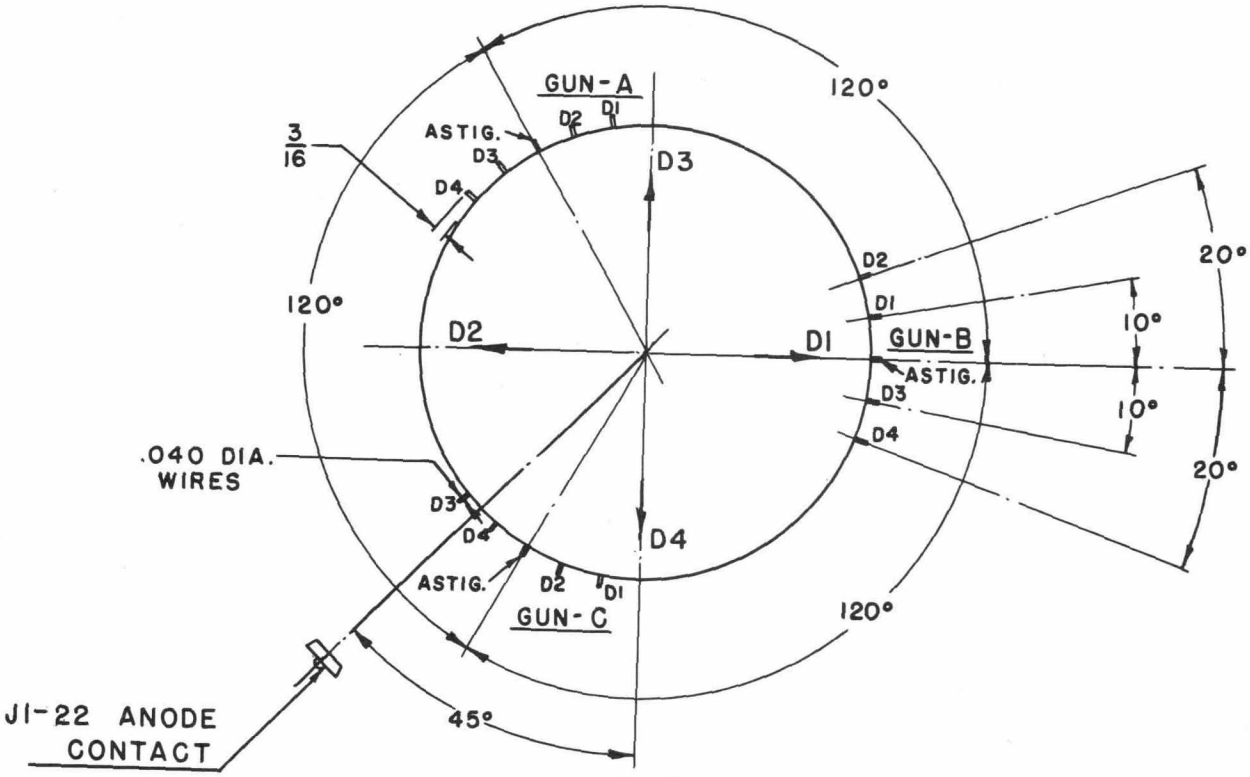

DETAIL-A
VIEW FROM BASE END OF TUBE

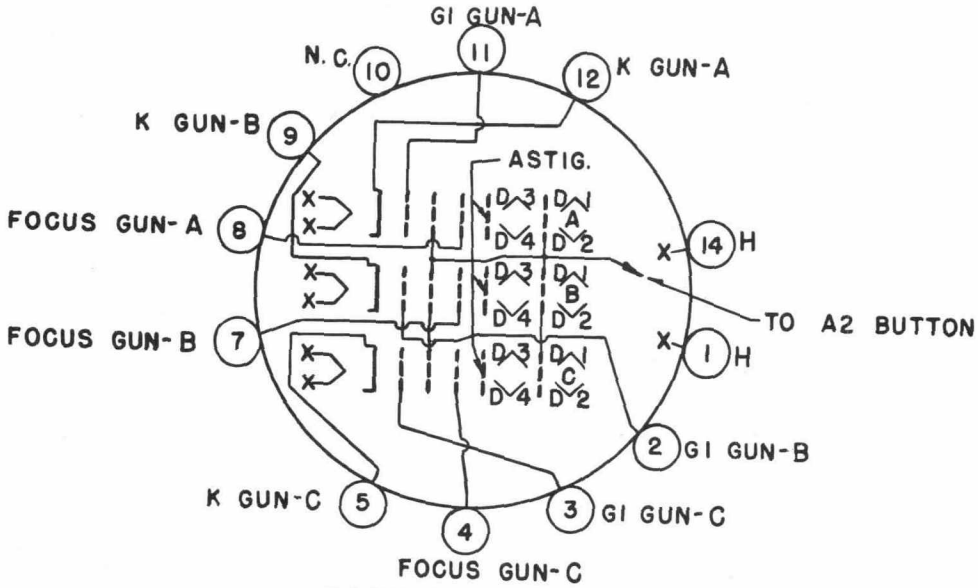

BASING DIAGRAM
VIEW FROM BASE END