BEAM SWITCHING TUBE
TROCHOTRON

RYG 10

The RYG 10 is a pulse counting tube in which a beam is formed with the help of a magnetic field. The beam position is indicated on a fluorescent screen in the tube, and also as a voltage on each of the ten control electrodes. Switching rates up to 1 mc can be obtained. The tube is used as a decade counter in Geiger-Müller apparatus, in industrial counting equipment, electronic computers, frequency dividers and the like.

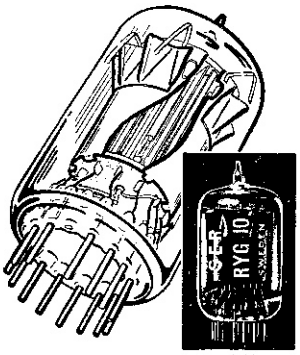

MECHANICAL DATA

Basing designation

Pin No	Connected to
1	Spade 1
2	Spade 2
3	Cathode
4	Spade 3
5	Spade 4
6	Plate
7	Spade 5
8	Spade 6
9	Spade 7
10	Heater
11	Heater
12	Spade 8
13	Spade 9
14	Spade 10

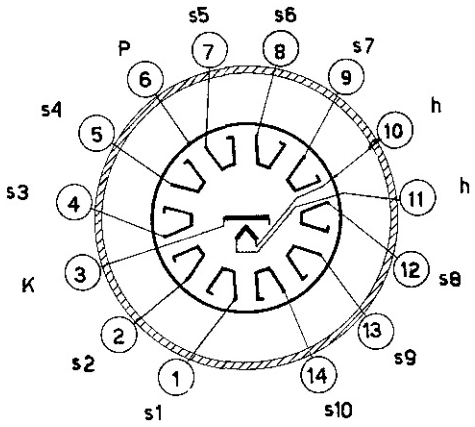

FIG. 1

BOTTOM VIEW

Dimensions

Overall Length, max. . . . 55 mms
Diameter, max. . . . . 28 mms
Diameter of pin circle . . 15 mms
Diameter of pins . . . . . 1 mm

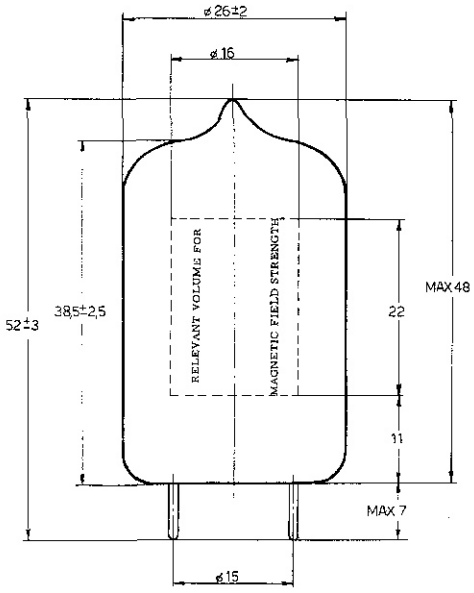

FIG. 2

Magnetic Field

A cylindrical magnet (see fig. 3) is recommended to provide the magnetic field. The magnet should be made of homogeneous material, and should give a field in the direction of the axis of the cathode with maximum variation of the order of a few percent within the relevant volume in fig. 2.

The field strength is defined as the mean value over the relevant volume, measured with a fluxmeter and a coil of the same size as the electrode structure of the tube.

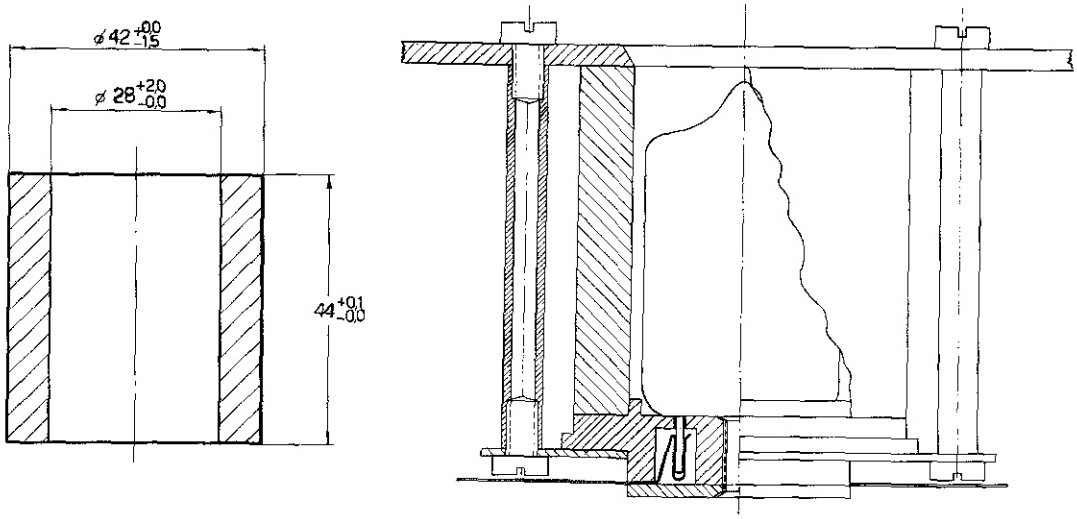

FIG. 3

ELECTRICAL CHARACTERISTICS

Heater Voltage	6.3	volts
Heater Current	0.3	amp
Plate Dissipation, max.	2.0	watts
Spade Dissipation, each spade, max.	0.5	watt
Heater-Cathode Voltage, max.	100	volts

Interelectrode Capacitances

Spade to other electrodes, approx.	2	uuF
Plate to other electrodes, approx. *	22	uuF

* Measured with the tube inside a magnet, connected to the spades and cathode, having an inside diameter of 29 mms.

Typical operation I (for max. recurrence frequencies 400 kc/s)

Supply Voltage (ref. to ground)	250	volts
Magnetic Field Strength	325	gauss
Spade Capacitance (incl. internal cap.)	33.5	uuF
Spade Resistance	180,000	ohms
Cathode Resistance (adjust to specified cathode current)	20,000	ohms
Cathode Current **	7.5	milliamps
Rise & Falltime of Drive-pulse, approx.	0.05	microsec.
Width of pulse at cathode potential	0.5	microsec.

AB SVENSKA ELEKTRONRÖR - STOCKHOLM 20 - SWEDEN
A SUBSIDIARY OF TELEFONAKTIEBOLAGET L M ERICSSON
R 10180

Typical operation II (for max. recurrence frequencies 1 mc/s)

Supply Voltage (ref. to ground)	350	volts
Magnetic Field Strength	375	gauss
Spade Capacitance (incl. internal cap.)	13	uuF
Spade Resistance	150,000	ohms
Cathode Resistance (adjust to specified cathode current)	20,000	ohms
Cathode current **	11.5	milliamps
Rise & Falltime of Drive-pulse, approx.	0.05	microsec.
Width of pulse at cathode potential	0.3	microsec.

** At pulse recurrence frequencies above 100 kc/s, the cathode current decreases somewhat.

Note. If visual indication of the beam position is desired, the plate should be operated at not less than 80 volts.

TECHNICAL INFORMATION

CONSTRUCTION AND OPERATION

The RYG 10 is a high-vacuum tube in which the electron beam can be guided to 10 positions, or boxes, arranged around the cathode, and can be set direct to any position desired.
External circuit components hold the beam in a given position until it is required in another.
Ten V-shaped electrodes, called spades, form a circle of ten boxes with parallell sides around the oxide-coated cathode. The plate is a cylinder outside the spades (see fig. 4).

CLEAR CONDITION

If all the spades are positive with respect to the cathode, the magnetic field will deflect the emitted electrons before they reach the spades, and they will be driven back towards the cathode. This establishes a negative space charge around the cathode, which suppresses further emission. Under these conditions, the tube passes no current. A cloud of electrons circle around the cathode, their direction of rotation beeing determined by the polarity of the magnetic field (see fig. 5).

ONE SPADE AT CATHODE POTENTIAL

If one of the spades is at cathode potential, the electrons can no longer circle around the cathode, but are deflected towards the spade. They pass into the box formed by the negative spade and its preceding neighbour, and then strike the plate (see fig. 6).
The strength of the electron flow thus established depends on the geometry of the tube, the spade voltage, and the intensity of the magnetic field. The variation of the plate and spade currents with the spade voltage appears in fig. 7, which also shows that a part of the spade characteristic has a negative slope. It is this property upon which the locking operation of the tube is based.

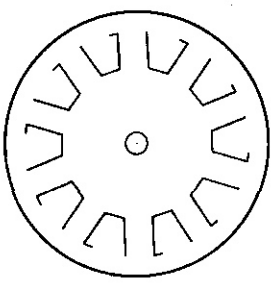

FIG. 4

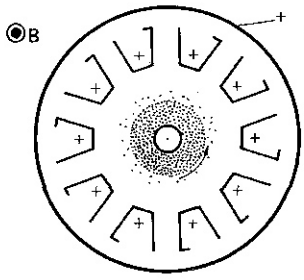

FIG. 5

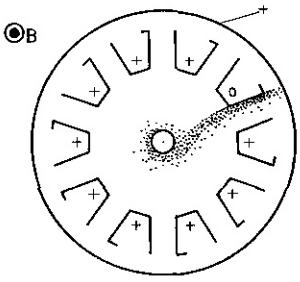

FIG. 6

LOCKING THE BEAM

If a sufficiently high resistance is placed in series with each spade, the negative spade characteristic allows automatic locking of the beam; when the voltage on a spade falls momentarily to cathode level, the voltage drop across the resistance holds the spade voltage low enough to lock the beam in position.

A spade with such a series resistance has two stable operating points (see fig. 7):

A. Near the cathode voltage, where the beam is automatically locked and current flows in the spade circuit.

B. At the supply voltage, where no spade current flows.

ADVANCING THE BEAM

Fig. 8 shows how the beam can be advanced in the RYG 10.

There is an RC circuit in series with each spade. Assume that the beam is locked by spade N, a larger part of the electron flow going to the plate. If the plate voltage is now lowered to the cathode level or below it, the electrons will flow to spade N + 1, following the path indicated by the dashed lines in the drawing. The resultant current charges the capacitor in the spade circuit, and the spade voltage drops. When the voltage has dropped to a certain value, the beam is locked to spade N + 1 and the entire beam advances to the next box. The plate voltage must now resume its positive value, as otherwise the beam will continue to rotate.

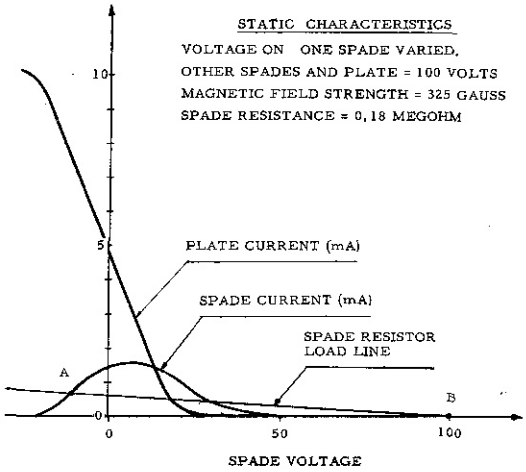

FIG. 7

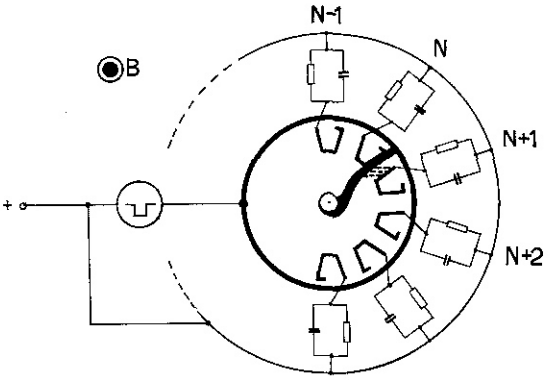

FIG. 8

CONDITIONS FOR OPERATION

Two conditions must be met for the tube to function as a counter:

1. The values of the spade voltage, the magnetic field strength and the spade circuit resistance must be such that the beam can be held in every box.

2. The duration of the drive pulse must be such that the beam advances one position only, for each pulse.

SUPPLY VOLTAGE LIMITS

For most applications, the two characteristics shown in fig. 9 are of importance.

Characteristic I is obtained by varying the voltage on spade N, with the other spades and the plate at the supply voltage. (Compare fig. 7, where the same curve is shown).

Characteristic II is obtained by varying the voltage on spade N with the spade N - 1 at locking voltage E_L, and the plate and other spades at the supply voltage.

The lowest supply voltage which can be used is that at which the loadline just cuts the peak of characteristic curve I (see fig. 10). At lower supply voltages, the spade current characteristic drops so that the loadline does not cut the curve, and the spades do not lock the beam.

The highest supply voltage which can be used is that at which the tail of curve II just touches the loadline (see fig. 11). At higher voltages, selfrotation occurs.

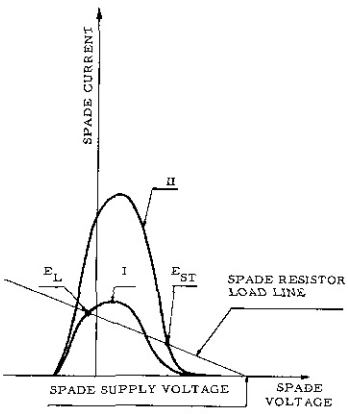

FIG. 9

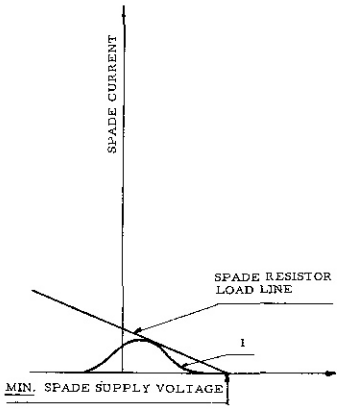

FIG. 10

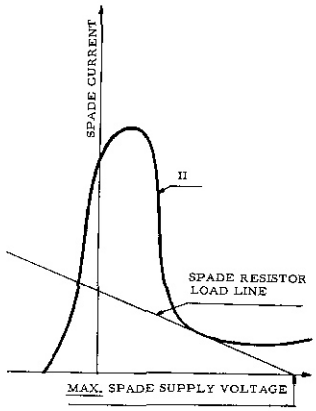

FIG. 11

SHAPE OF DRIVE PULSE

The pulse duration must be sufficient to allow the voltage on spade N + 1 to drop below the beam advance value (E_{ST} in fig. 9); otherwise, the beam will not advance.
The pulse must not last long enough, however, to allow the voltage on spade N + 2 to drop below E_{ST}, as the beam will then advance more than one position.

The amplitude of the pulse must be great enough to hold the plate voltage down to the cathode level or below it during the stepping interval.
For the following discussion the effective pulse width is defined as the time the plate voltage is equal to or below cathode level.

To prevent the tube capacitances and stray capacitances from seriously affecting the stepping we recommend a value of not less than 10 uuF for the spade capacitor.

STEPPING SPEED

As the spade voltage has to obtain its initial value before the beam returns, the time for a complete rotation (10 positions) is determined by the time required for the spade capacitor to discharge.

The time that should be allowed for one rotation is:

$$4 \cdot R_{sp} \cdot C_{sp} \qquad (1)$$

R_{sp} should be at least 100,000 ohms. At values lower than 170,000 ohms, it is necessary to use high voltages and strong magnetic fields so as to increase the cathode current. Reference is made to "Selecting operating conditions" on page 7.

CATHODE RESISTOR

To counteract variations in cathode current caused by variations in the supply voltage or input pulse rate or by aging of the magnet, it is advisable to use a resistor in series with the tube, usually a cathode resistor.

INDICATION OF BEAM POSITION

The fluorescent screen in the tube provides visual indication of the beam position. Since the potential of the spade to which the beam is locked is at cathode level, electrical indication can also be obtained. Load resistors down to 3 megohms may be used in the spade circuits without endangering beam advance.

ZEROING

Since the tube is symmetrical in construction, it can be zeroed to any of its ten positions. The simplest procedure is to open the voltage supply to all spades, which clears the tube; then the supply voltage is applied again, but the voltage rise at the "0" spade is delayed by an RC circuit or by means of manual switching.

SELECTING OPERATING CONDITIONS

Notation:

E_{sp}	spade supply voltage with respect to cathode
E_p	plate voltage with respect to cathode
B	magnetic field strength, defined as in fig. 2
I_k	cathode current
R_{sp}	spade circuit resistance
C_{sp}	spade capacitance, including external capacitances
t	duration of drive pulse

A suitable operating point can be determined with the equations below.

To find the relationship between the spade supply voltage and the magnetic field strength:

$$\frac{E_{sp}}{B^2} = 0.96 \cdot 10^{-3} \qquad \text{volt/(gauss)}^2 \qquad (2)$$

To find the spade circuit resistance:

$$R_{sp} \cdot \sqrt{E_{sp}} = 1.80 \cdot 10^3 \qquad \text{kohm} \cdot (\text{volt})^{1/2} \qquad (3)$$

To find the pulse duration:

$$\frac{t}{C_{sp}} \cdot \frac{I_k}{E_{sp}} = 1.10 \cdot 10^{-3} \qquad \frac{\text{us} \cdot \text{mA}}{\text{uuF} \cdot \text{V}} \qquad (4)$$

Normally, E_p should be equal to E_{sp}

An operating point chosen from the above equations gives a favourable operation range. A view of permitted variations is given in fig. 12 to 14, where:

Fig. 12 shows the static characteristics for cathode current as a function of the supply voltage at different magnetic fields and with one spade locked by a resistor of 180,000 ohms.

Fig. 13 shows permitted voltagechanges when all other parameters are kept at the values indicated on the diagrams. The working ranges should be considered as average values.

Fig. 14 shows that the working range decreases at higher counting speeds.

Figs. 15 and 16, finally, show the construction of driving circuits for different counting speeds.

AVERAGE CHARACTERISTICS

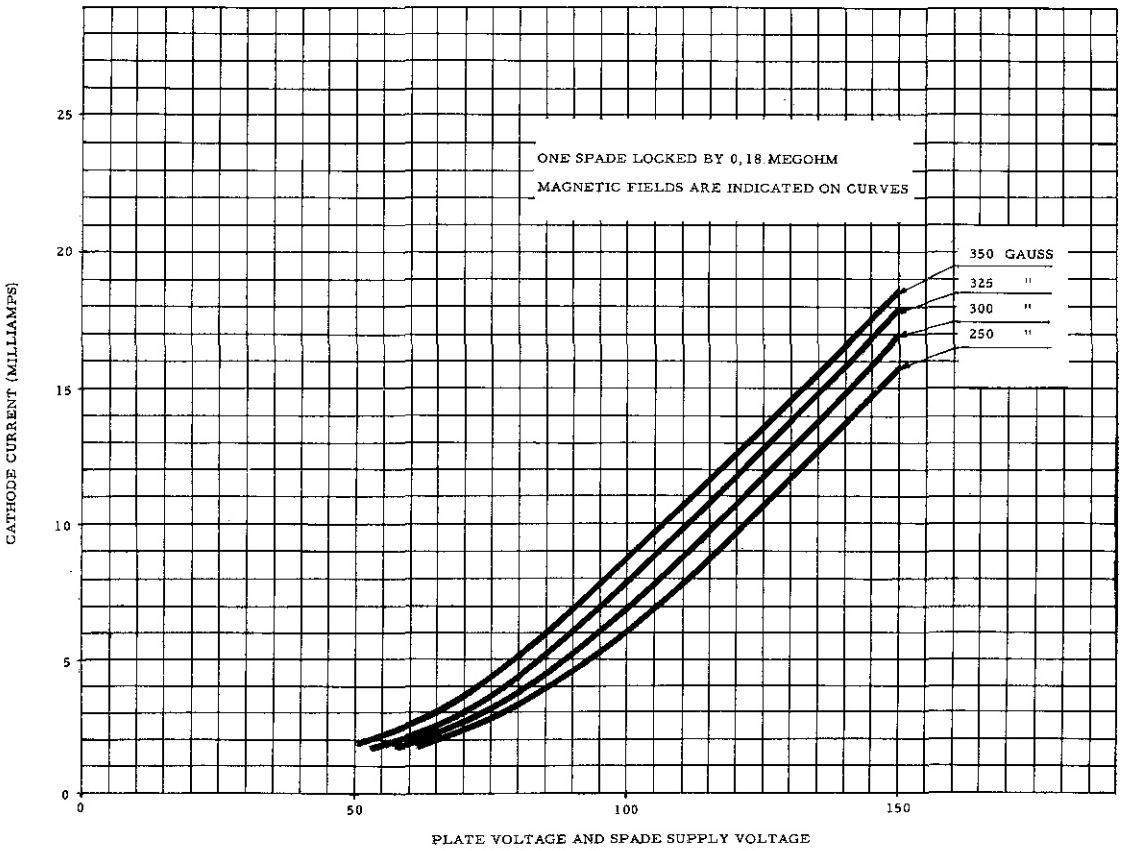

FIG. 12

AVERAGE CHARACTERISTICS

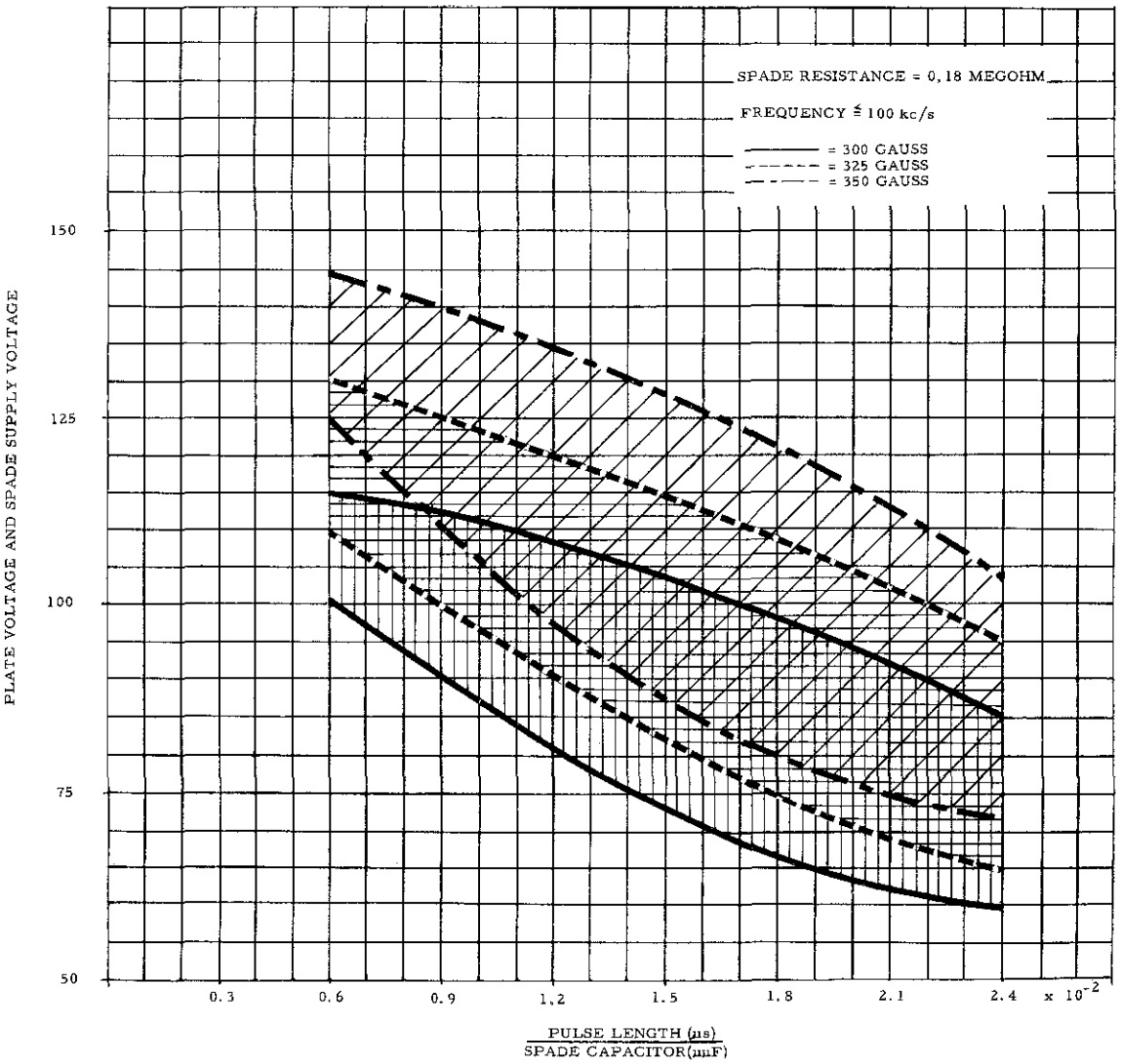

FIG. 13

AVERAGE CHARACTERISTICS

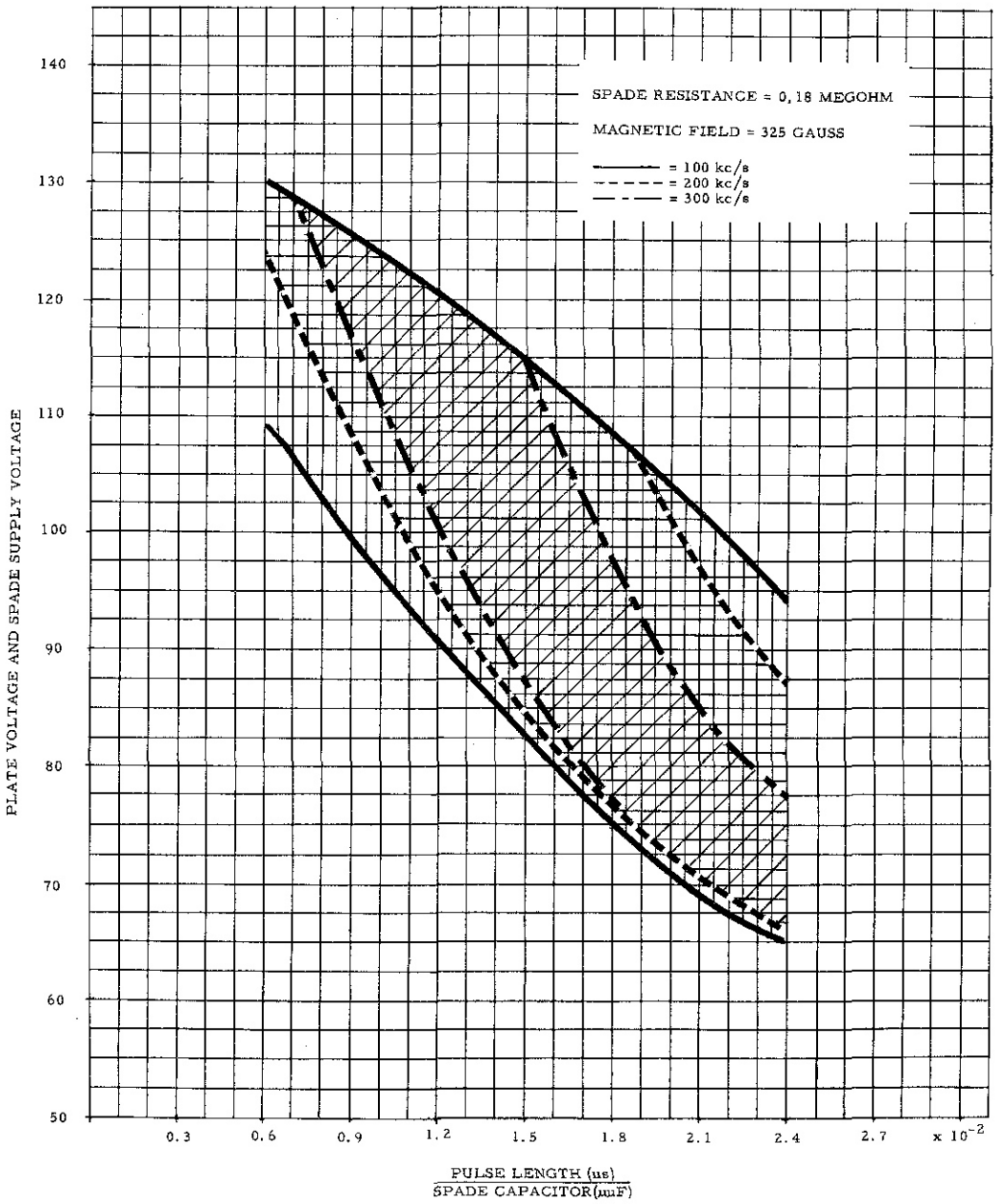

FIG. 14

TROCHOTRON DRIVING CIRCUIT FOR FREQUENCIES UP TO 1 Mc/s

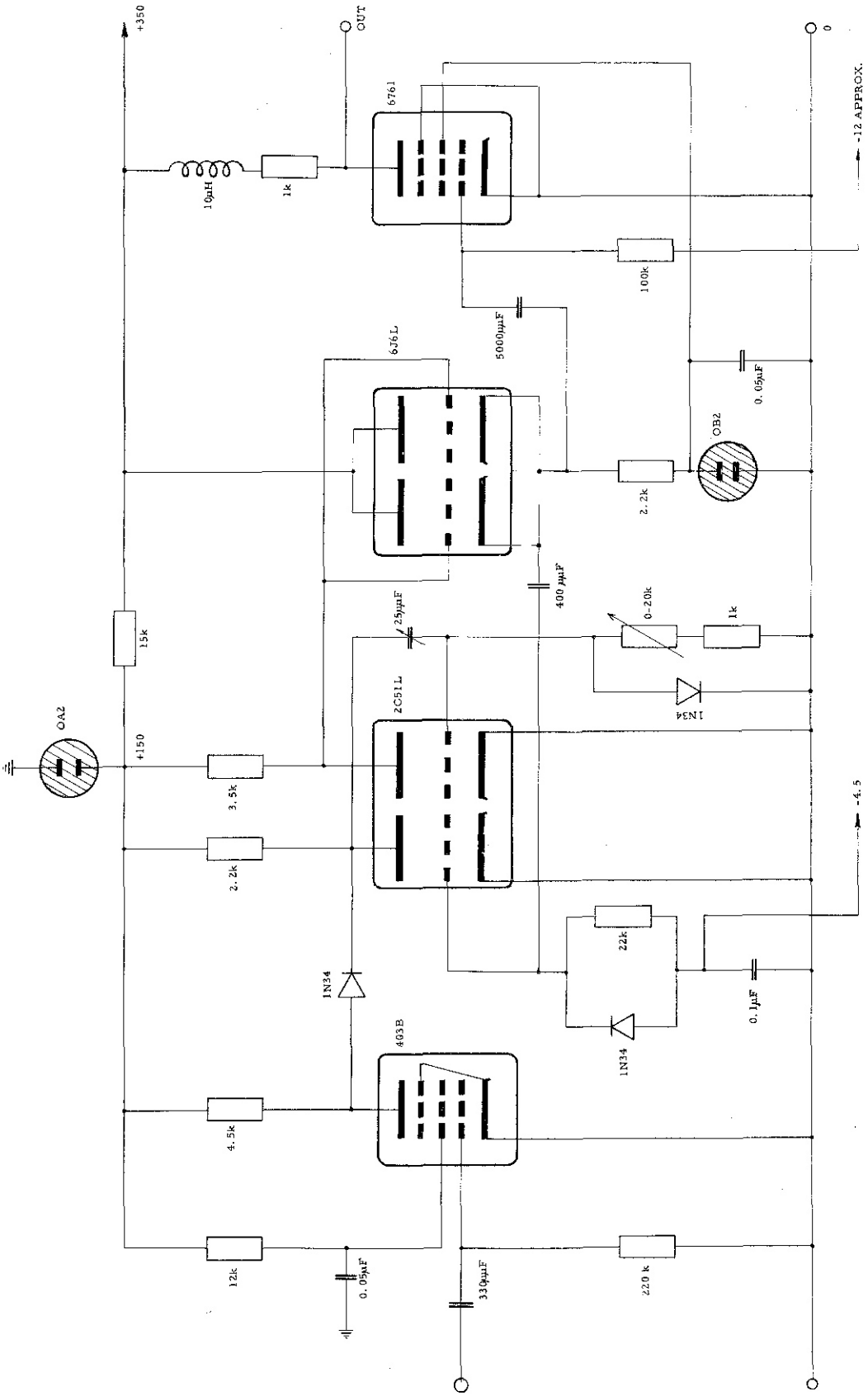

FIG. 15

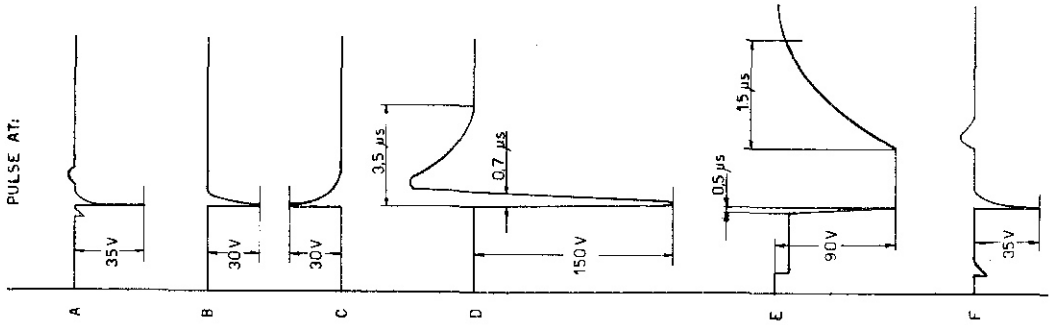

DECADE COUNTER, USING THE TROCHOTRON RYG 10
Counting speed max. 300.000 pulses/sec.

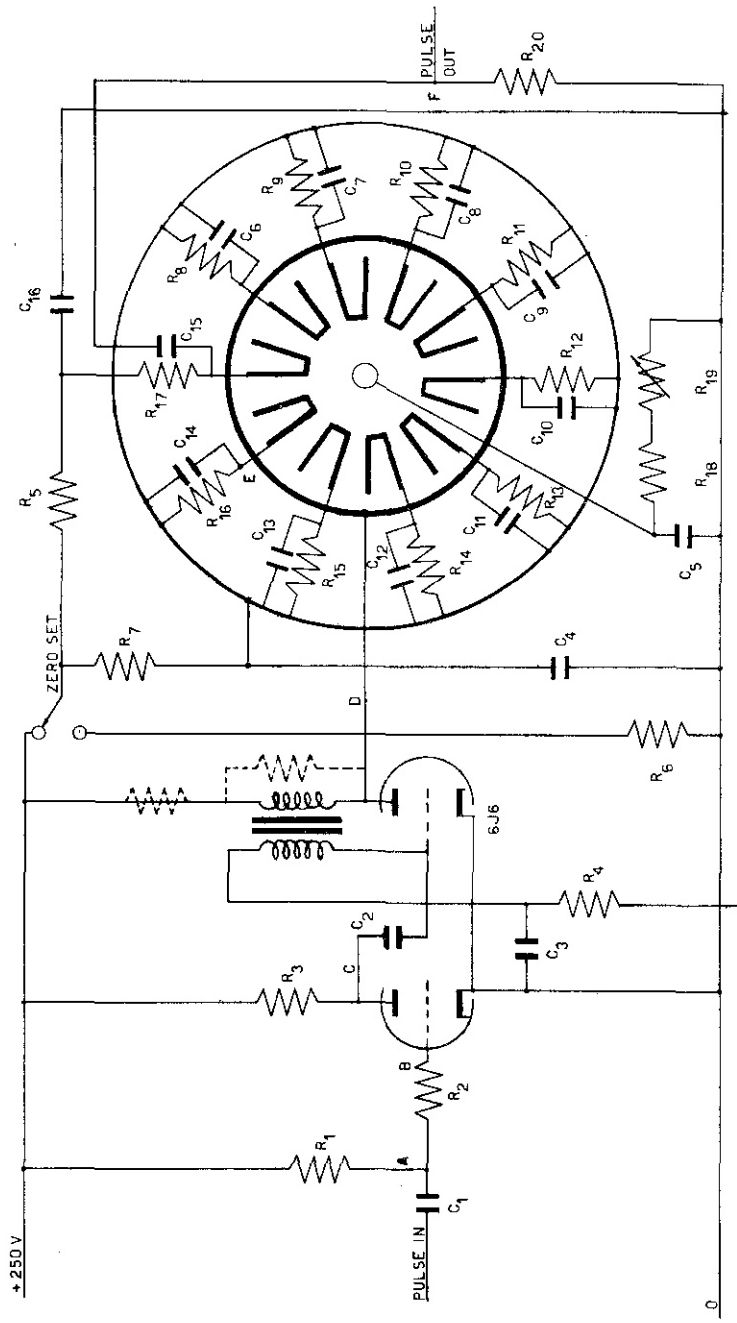

Fig. 16

AB SVENSKA ELEKTRONRÖR - STOCKHOLM 20 - SWEDEN
A SUBSIDIARY OF TELEFONAKTIEBOLAGET L M ERICSSON