# POWER TRAVELLING WAVE TUBE

f = 5.8 to 7.3 k Mc

**RW 6**

Design and Application

Preliminary Data

Power travelling wave tube specially designed for broadband radio relay systems with an average power output of 10 watts and an average gain of 39 db.
The RW 6 is a periodic, permanent magnet focused travelling wave tube and is replaceable within the magnet system. It is arranged to operate with depressed collector.
The rf power is coupled in and out by way of wave guides.

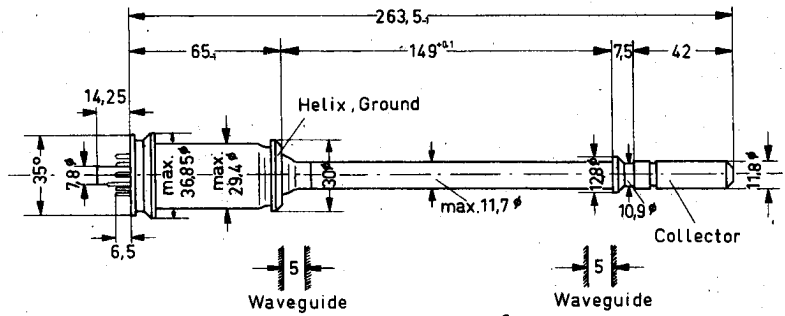


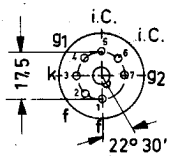


Dimensions in mm

| | |
|---|---|
| Base: | special type, included in magnet system |
| Tube mount: | delivered with magnet system |
| Weight of tube: | approx. 100 gm net |
| Weight of magnet system: | approx. 7.5 kg |
| Dimensions of magnet system: | 100 x 112 x 338 mm |
| Dimensions of tube packing: | 175 x 190 x 445 mm |
| Waveguide: | F 70, DIN 47302, 34.85 x 5 mm (similar to WR 137) |
| Flange: | NF 70, DIN 47303 |
| Mounting position: | see "Cooling" |

## Heating

| | | | |
|---|---|---|---|
| Heater voltage | = | 6.3 ± 2 % | V (1) |
| Heater current | ≈ | 0.9 | A |
| Cathode heating time | ≥ | 2 | min |

indirect by AC, parallel supply

MK-dispenser cathode

## Characteristics

| | | | |
|---|---|---|---|
| Frequency range | = | 5.8 to 7.3 | kMc |
| Saturation power | = | 18 | W |
| Average gain ($P_o$=10 W) | ≈ | 39 | db |
| Small-signal gain ($P_o$ = 1 W) | ≈ | 40.5 | db |
| Reflection factor | ≤ | 15 | % (2) |
| Reflection factor | ≈ | 5 | % (3) |
| Magnetic field strength | ≈ | 800 | Gauss(4) |

(1) If the maximum variation of the heater voltage exceeds the absolute limits of ± 2 %, the operating performance of the tube will be impaired and its life shortened.

(2) At input and output of cold tube with optimum adjustment of rf matching elements to midband and a bandwidth of ± 100 Mc in the frequency range from 5.8 to 7.3 kMc.

(3) At input and output of cold tube with optimum adjustment of rf matching elements to midband and a bandwidth of ± 10 Mc in the frequency range from 5.8 to 7.3 kMc.

(4) Peak value of alternating magnetic field.

## Typical Operation

| | | | | | |
|---|---|---|---|---|---|
| Operating frequency | = | 6.2 | 6.6 | 7.0 | kMc |
| Power output | = | 10 | 10 | 10 | W (5) |
| Gain | = | 39.5 | 38.5 | 37 | db |
| Collector voltage | = | 1300 | 1300 | 1300 | Vdc (6) |
| Helix voltage | ≈ | 2480 | 2460 | 2440 | Vdc |
| Grid No. 2 voltage | ≈ | 550 | 550 | 550 | Vdc |
| Grid No. 1 voltage | = | -20 | -20 | -20 | Vdc (6,7) |
| Helix current | ≈ | 2 | 2 | 2 | mAdc |
| Grid No. 2 current | ≤ | 0.1 | 0.1 | 0.1 | mAdc |
| Cathode current | = | 45 | 45 | 45 | mAdc (6,8) |
| Noise figure | ≤ | 25 | 25 | 25 | db |
| AM/PM conversion | ≈ | 4.5 | | | °/dB (9) |
| Phase shift | ≈ | 1.7 | | | °/V (10) |

All voltages are referred to the cathode

## Maximum Ratings (absolute values)

| | | | |
|---|---|---|---|
| Collector voltage | min | 1250 | Vdc |
| Collector voltage | max | 1500 | Vdc |
| Collector dissipation | max | 65 | W |
| Helix voltage | max | 2800 | Vdc |
| Helix voltage | min | 2100 | Vdc |
| Helix current | max | 3.5 | mAdc (11) |
| Helix dissipation | max | 9 | W |
| Grid No. 2 voltage | max | 650 | Vdc |
| Grid No. 2 voltage | min | 450 | Vdc |
| Grid No. 2 dissipation | max | 0.2 | W |
| Negative grid No. 1 voltage | max | 25 | Vdc |
| Positive grid No. 1 voltage | max | 0 | Vdc |
| Cathode current | max | 50 | mAdc |
| Collector temperature | max | 250 | °C |

(5) For smaller outputs, the cathode current may be decreased to 25 mAdc by varying the grid No. 2 voltage. It is necessary to consult the manufacturer in such instances.
(6) Adjusting values
(7) It is recommended to adjust the grid No. 1 voltage by means of the cathode resistor.
(8) Changing the cathode current by 1 mAdc in the range from 42 - 47 mAdc has the effect of changing the gain by about 1 db.
(9) AM-PM conversion is the phase shift of the rf-output signal when changing the input by 1 db.
(10) Phase shift of rf-output signal when changing the helix voltage by 1 volt.
(11) The helix current may rise momentarily to 5 mAdc due to power supply surges and during starting.

## Operating Instructions

The travelling wave tube RW 6 may be operated only in conjunction with the associated magnet system MRW 6. The particular advantages of the periodic permanent-magnetic focussing of the RW 6 are the relatively small dimensions of the magnet system and the extremely small leakage field. Thus the magnetic field is largely neutral. The sensitivity to temperature changes is low.
With operation in radio link systems, isolators should be coupled to the tube input and output to avoid distortions due to multiple reflexions.

All tube voltages are referred to the cathode.

Grid No. 1 voltage is automatically generated by the cathode current at resistor $R_k$. Grid No. 2 voltage should be variable within a range of 450-650 volts. It can be tapped at a voltage divider $R_1$, the shunt resistance of which may not exceed 2.5 Meg.
The helix voltage should be variable between 2100 and 2800 volts. Consult the operating data and the curve on sheet K 5 for the filtering and stabilization necessary to meet the requirements of the respective system.
No stabilization is required for the collector voltage. The power dissipation involved must, however, be adhered to.

A protective relay must be inserted into the helix input circuit to disconnect the helix and grid No. 2 voltage when the maximum value for the helix current is exceeded.

When using an independant voltage source for grid No. 2, the immediate disconnection of grid No. 2 voltage in the case of an outage of the helix voltage must be ensured by an interlocking device. When the collector voltage is outed, the helix voltage and grid No. 2 voltage must be disconnected either by the overload relay in the helix input circuit or by a voltage interlocking system.

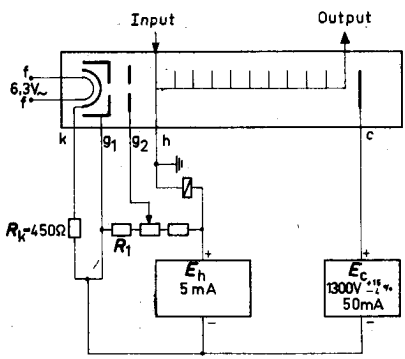


Designations of the grids: $g_1$ = focusing electrode (Wehnelt)
$g_2$ = acceleration electrode

## Cooling

With ambient temperatures up to 40°C the RW 6 may be operated without special cooling if the tube is mounted in horizontal position and if a natural vertical air circulation is provided by the radiator.
With other mounting positions or with an excessive ambient temperature additional cooling by a low air flow (about 10 l/min) is required. In such a case it is important that the maximum admissible collector temperature of 250°C (absolute limit) is not exceeded.

## Starting

For operation without danger, the magnet system must be properly grounded. For starting the tube, the preliminaries should be performed in the following order:

1. Connect up leads:

| | | |
|---|---|---|
| Filament | f,f | : brown |
| Cathode | k | : yellow |
| Grid No. 1 | $g_1$ | : green |
| Grid No. 2 | $g_2$ | : blue |
| Helix, Ground | h | : red |

   Collector c: shielded lead must be soldered to the therminal on radiator of magnet system (see page 6)
2. Screw off sleeve.
3. Insert tube in magnet system.
4. Plug tube mount into tube and screw on sleeve until stop is reached. Check that threads are not binding.
5. Apply heater voltage and preheat tube for at least 2 min.
6. Apply collector voltage.
7. Switch on voltage supply for helix and grid No. 2. If separate power supplies are used, both must be switched on simultaneously. Make sure that full voltages are applied immediately and not increased gradually to full value.
8. Adjust cathode current by varying grid No. 2 voltage.
9. Adjust helix current to a minimum with the aid of radial field corrector (ring adjuster pair at cathode side of magnet system) and axial field corrector (cylindrical threaded ring adjustable along axis of tube).
10. Switch on rf-input signal and adjust to optimum gain with the helix voltage for the output required.
11. Correct field again as outlined under item 9.
12. Adjustment to minimum reflection factor is possible with the aid of the rf-matching elements at inlet and outlet.

## Switching off

The voltages must be removed either in the reverse order to that in which they were applied, or simultaneously.

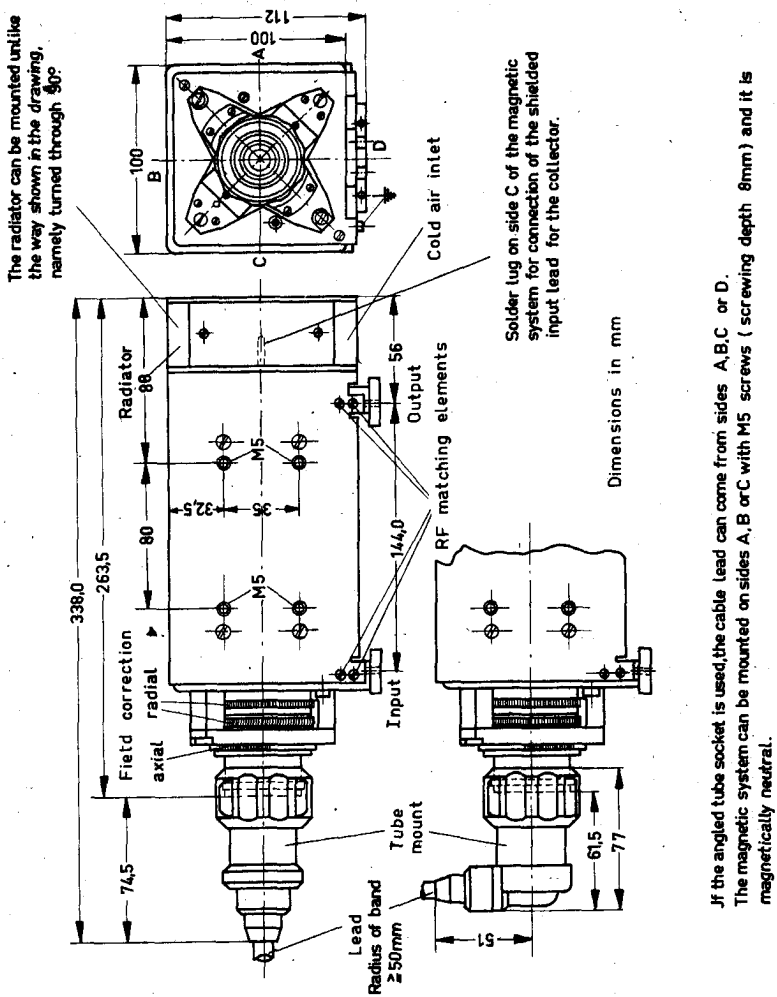
The radiator can be mounted unlike the way shown in the drawing, namely turned through 90°
112
100
A
B
C
D
100
Cold air inlet
Solder lug on side C of the magnetic system for connection of the shielded input lead for the collector.
Radiator
88
56
Output
M5
35
32,5
80
144,0
RF matching elements
Dimensions in mm
338,0
263,5
M5
Field correction
radial
axial
Input
Tube mount
74,5
61,5
77
Lead
Radius of band ≥50mm
51
If the angled tube socket is used, the cable lead can come from sides A, B, C or D.
The magnetic system can be mounted on sides A, B or C with M5 screws (screwing depth 8mm) and it is magnetically neutral.

# Characteristics

Gain = $f(P_o)$



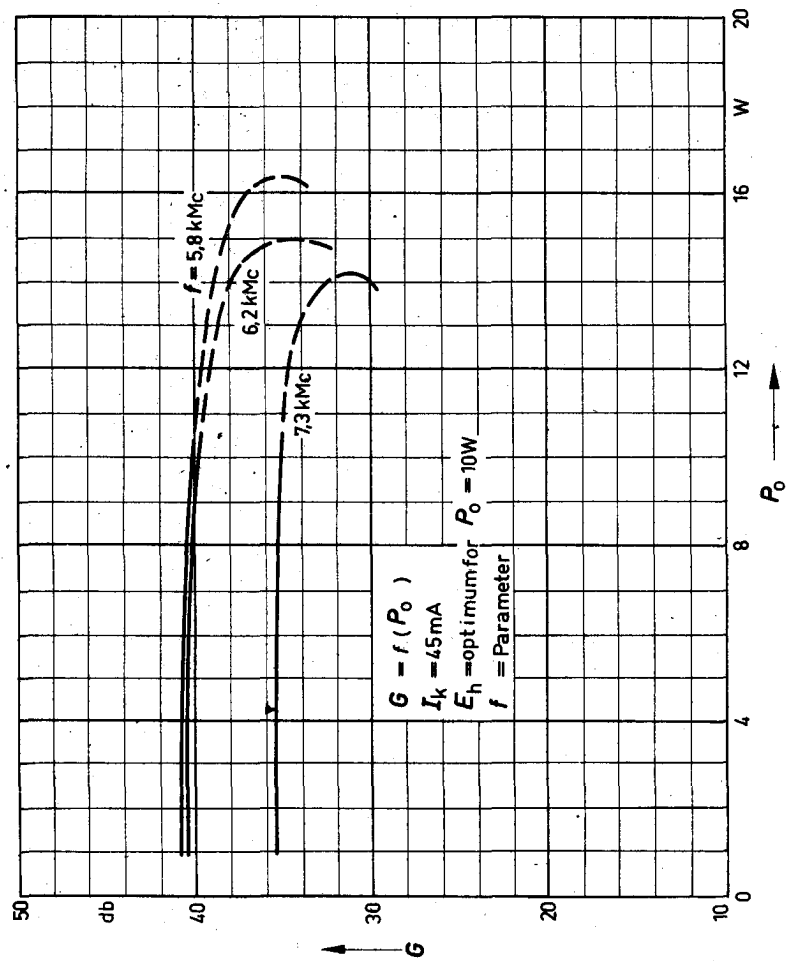

# Characteristics

Gain, $E_{hopt} = f(P_o)$



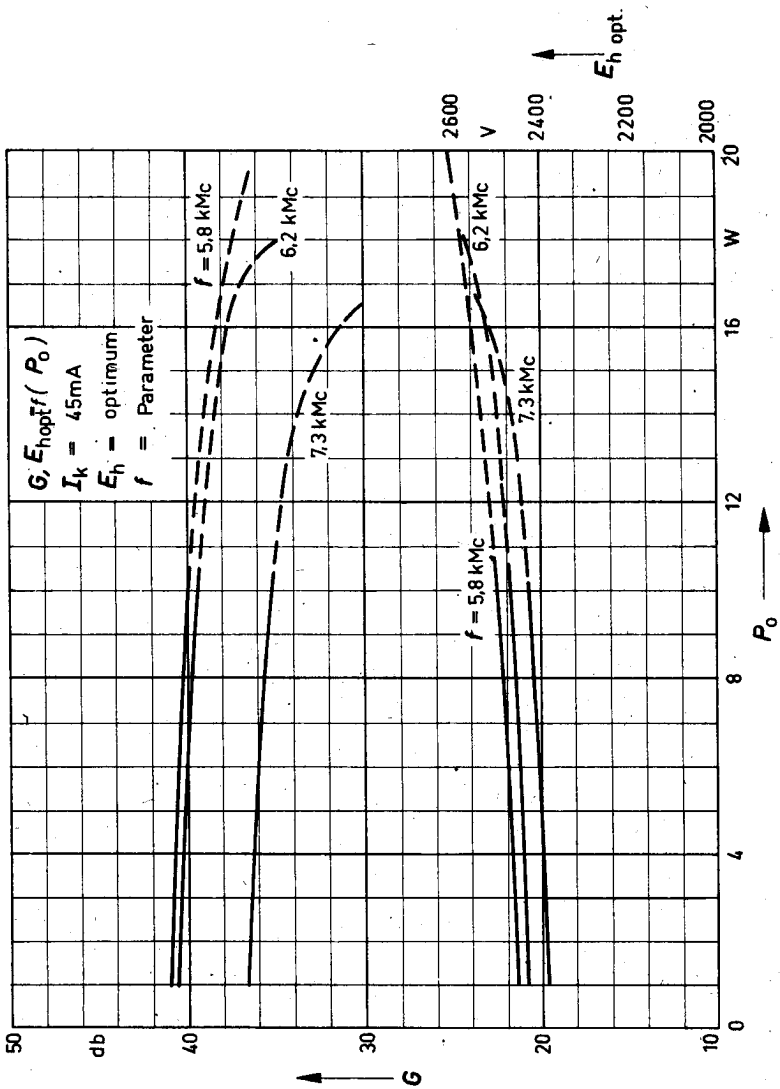

# Characteristics

Gain, $E_{hopt} = f$ (Frequency)



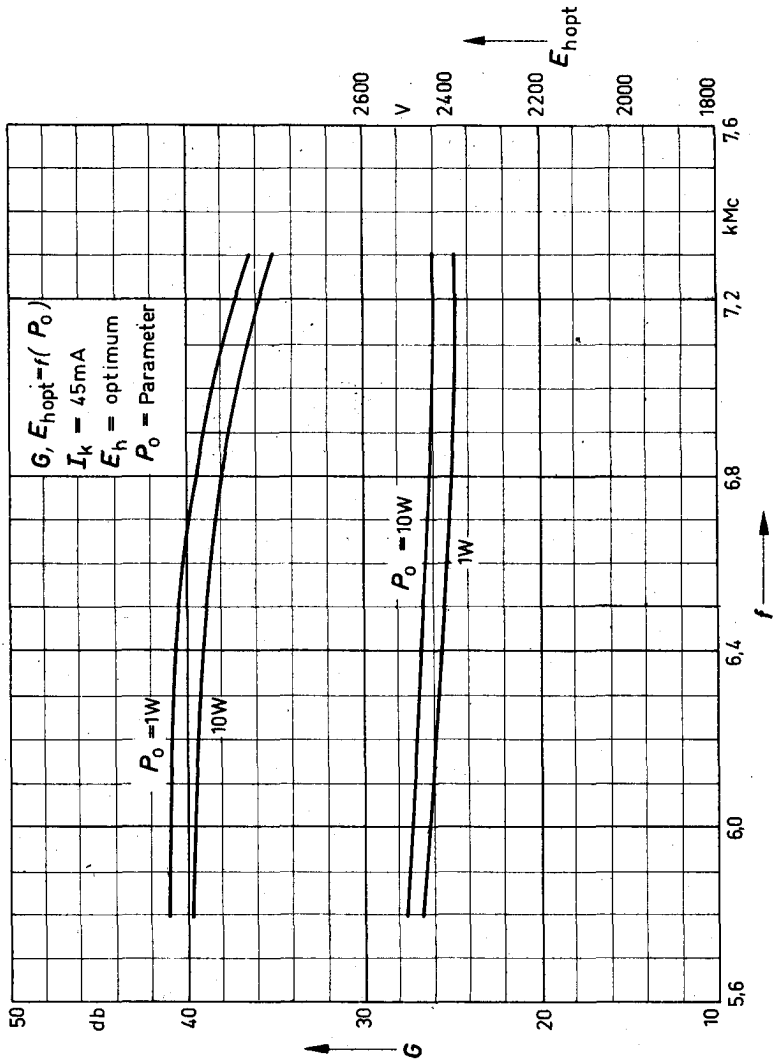

# Characteristics

$P_o = f(P_i)$

Gain $= f(P_o, P_i)$

SIEMENS RÖHREN

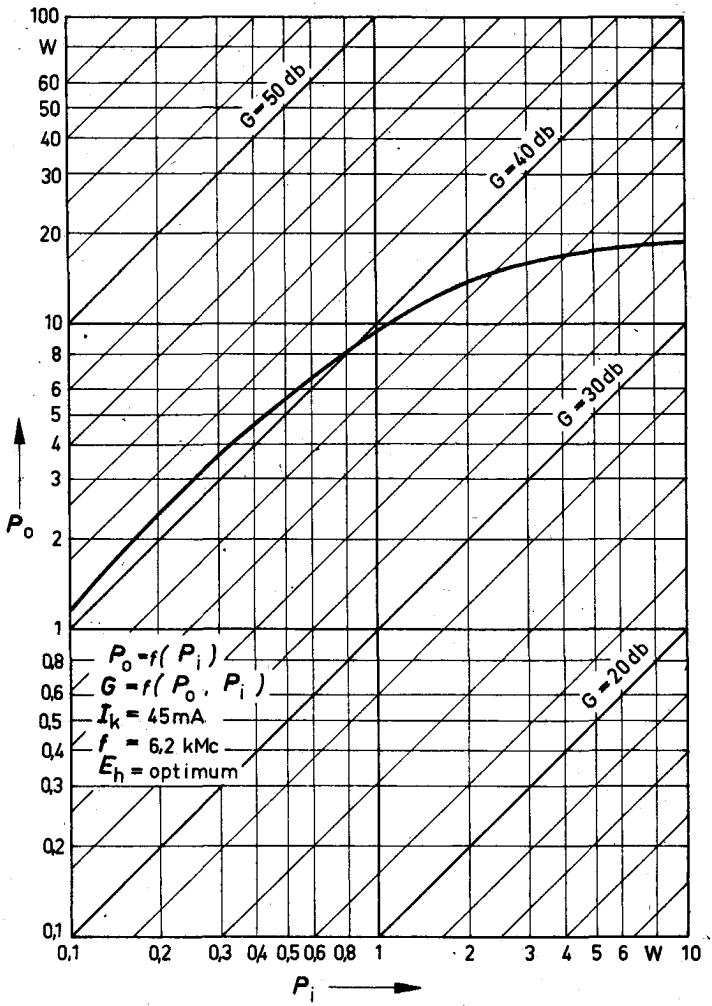

# Characteristics

$P_o, k_p = f(E_h)$

$k_p = f(P_o)$



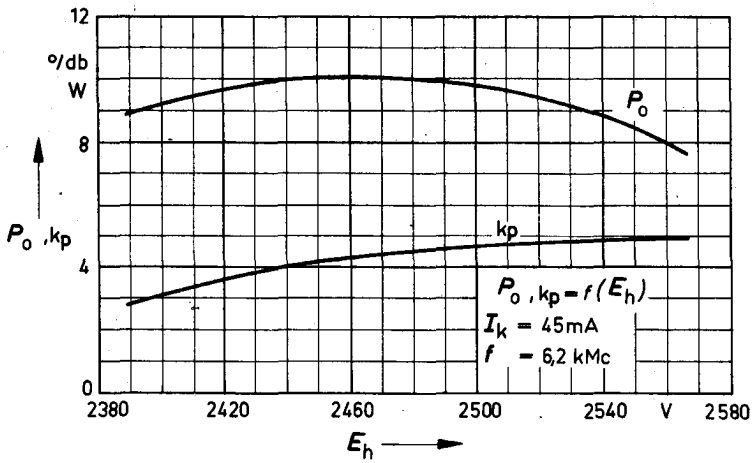


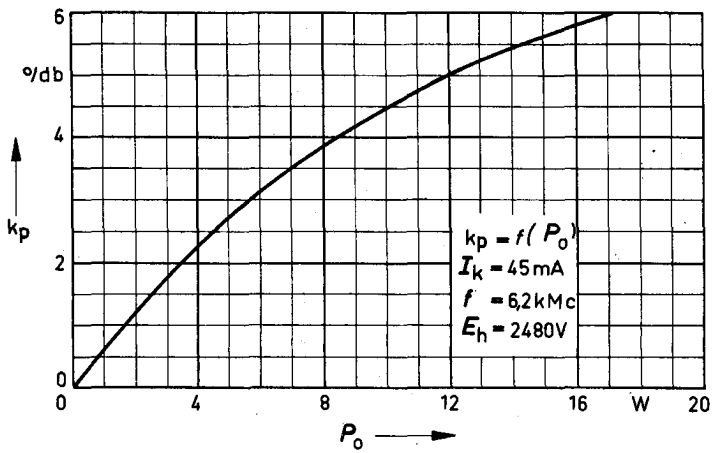


S I E M E N S & H A L S K E A K T I E N G E S E L L S C H A F T
W E R N E R W E R K F Ü R B A U E L E M E N T E
Printed in Germany